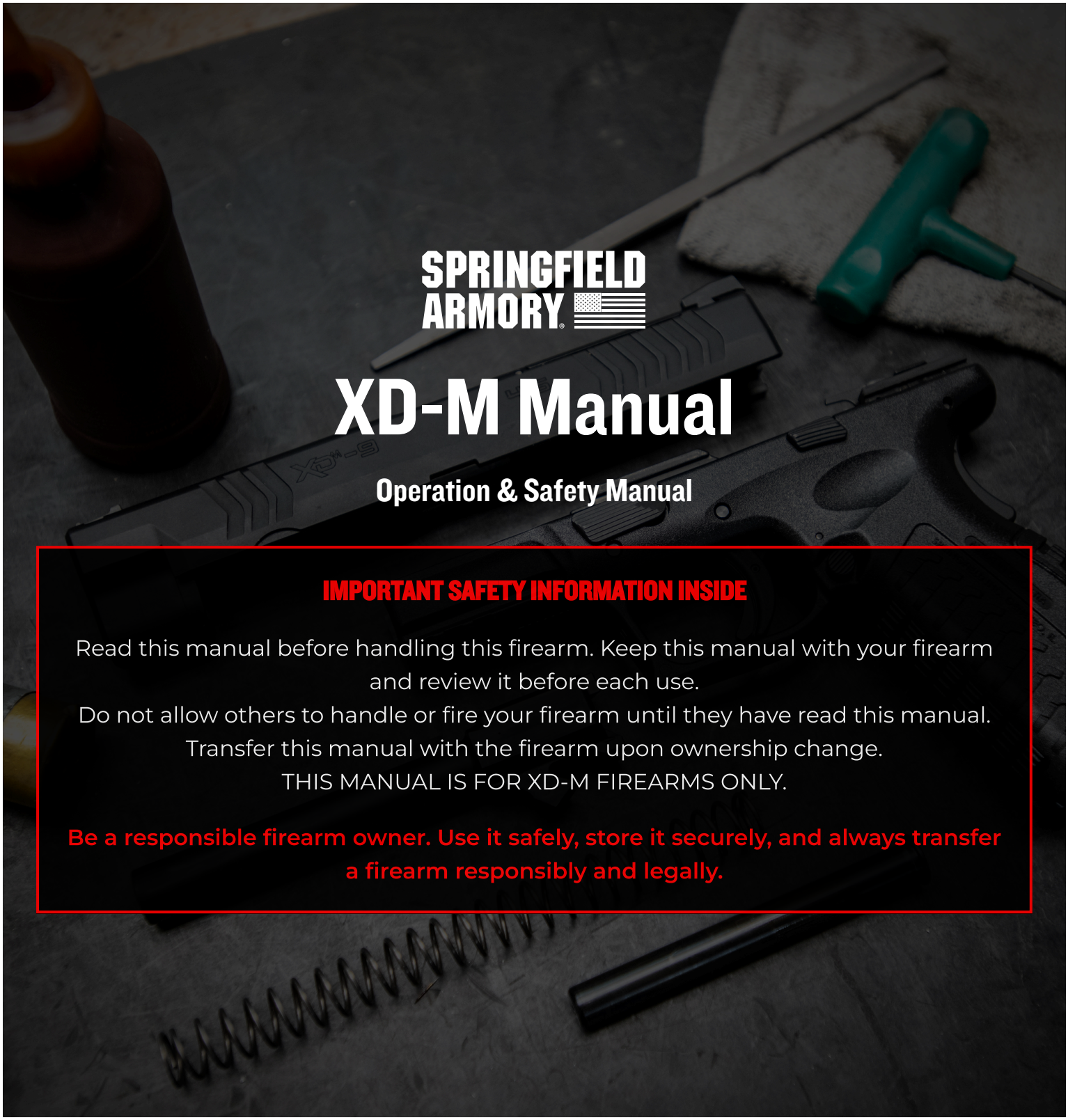

SPRINGFIELD ARMORY

XD-M Manual

Operation & Safety Manual

IMPORTANT SAFETY INFORMATION INSIDE

Read this manual before handling this firearm. Keep this manual with your firearm and review it before each use.
Do not allow others to handle or fire your firearm until they have read this manual.
Transfer this manual with the firearm upon ownership change.
THIS MANUAL IS FOR XD-M FIREARMS ONLY.

Be a responsible firearm owner. Use it safely, store it securely, and always transfer a firearm responsibly and legally.

READ & UNDERSTAND THIS MANUAL

BEFORE LOADING AND FIRING THIS FIREARM, READ AND UNDERSTAND THE INFORMATION IN THIS MANUAL.

This is an auto loading firearm. It is immediately loaded and ready to fire again after each shot until all cartridges loaded in magazine have been fired. Some XD-M Elite pistols are available with a magazine disconnect. These pistols will **NOT** fire when the magazine is removed.

To determine if your pistol has a magazine disconnect, observe the top of the slide at the loaded chamber indicator position. Pistols with the magazine disconnect feature will have this verbiage at the loaded chamber indicator location: "Loaded When Up".

If still unsure of which model you have, please contact Springfield Customer Service: 800-680-6866.

ABOUT YOUR OWNER'S MANUAL

This is an instruction booklet on how to operate this firearm with some basic safe handling rules. It does not attempt to provide information about using a firearm to defend yourself, how to hunt, or for competitive or target shooting. It is important to receive training from a competent firearms instructor prior to engaging in any of these activities. The National Rifle Association, your local or state authorities, or your firearm dealer may provide information regarding available instructors or training courses. If you have a license to carry concealed, never do so without prior instruction from a certified instructor. Using a firearm for self defense is a complex subject with dangers and risks for which you must be properly trained. Every safety rule has a reason behind it - read the rules carefully and understand why each is important for safety.

It is recommended that every person receive instructions from a competent firearms instructor before handling this or any other firearm.

Know and obey all firearms laws and regulations, which may vary from city to city and state to state. Do not give a firearm to someone who is not allowed to own a firearm or who may use it for a criminal purpose.

USED FIREARMS

If you purchased this firearm as a used firearm, have it inspected and tested by a competent pistolsmith before you use it. Guns are sometimes altered and may require

repair before they can be used safely.

STORE FIREARMS SAFELY IN THE HOME

Store firearms unloaded, locked and in a secure place. Obey firearm storage laws. Store firearms and ammunition separately. Because your children may be in other homes where firearms are stored, you should show them what to do if they see or find a firearm by showing them the Eddie Eagle video available from the NRA by calling (703) 267-1000.

OBEY ALL FIREARMS LAWS WHEN BUYING AND SELLING FIREARMS. NEVER BUY A GUN INTENDING TO TRANSFER IT TO SOMEONE WHO IS PROHIBITED FROM OWNING FIREARMS. NEVER EVER BE A "STRAW PURCHASER."

KNOW YOUR FIREARM

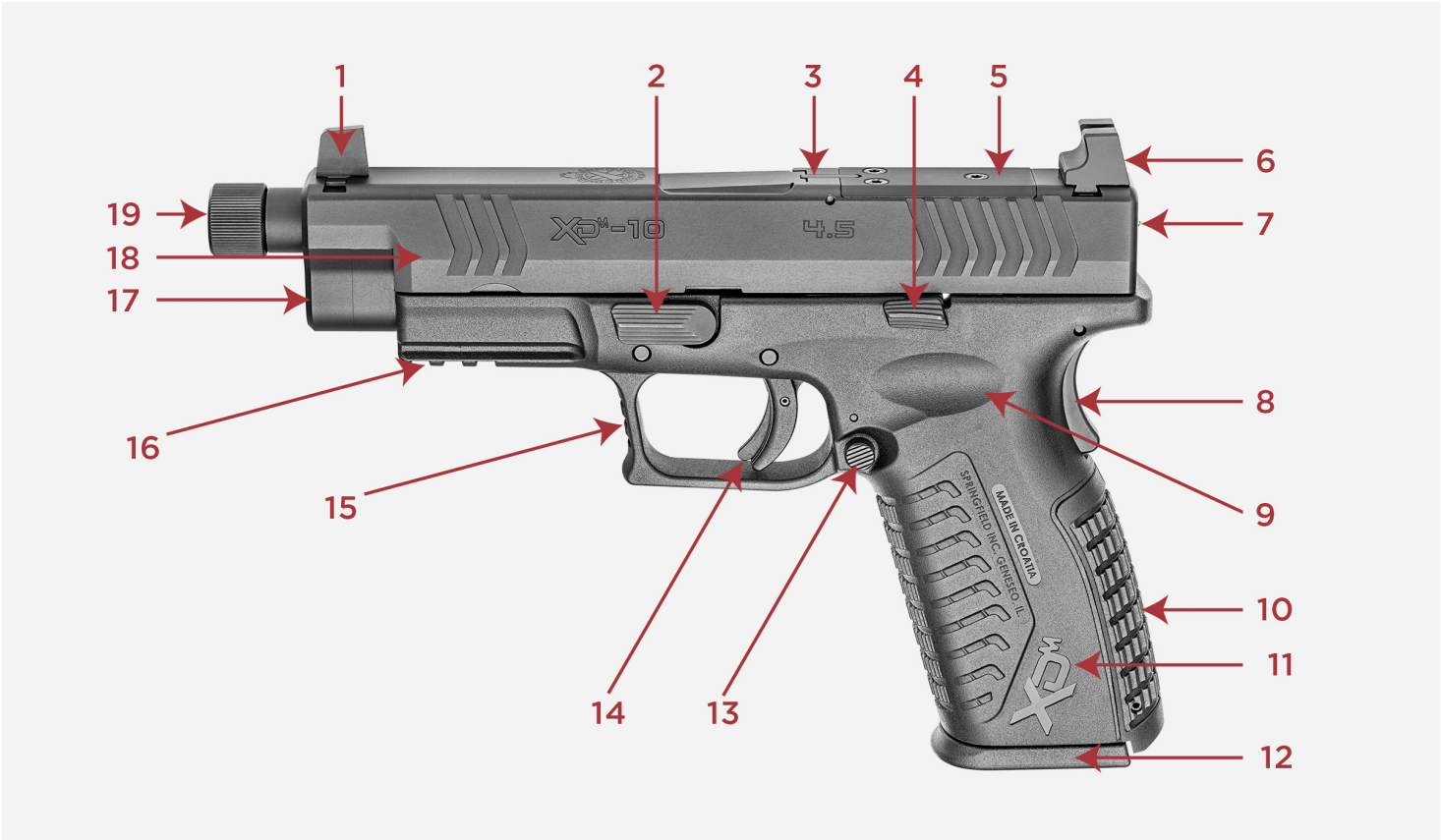

PG4-KnowYourFirearm

1 Front Sight

2 Disassembly Lever

3 Loaded Chamber Indicator (Top of Slide)

4 Slide Stop Lever

5 OSP™ Cover Plate (OSP Models Only)

6 Rear Sight

7 Striker Status Indicator

8 Grip Safety

9 Thumb Rest

10 Interchangeable Backstrap

11 Frame

12 Magazine

13 Ambidextrous Magazine Release

14 Ultra Safety Assurance (USA)™ Trigger System

15 Grooved Trigger Guard

16 Light or Accessory Rail

17 Non-Captive Recoil Spring System (Internal)

18 Slide

19 Threaded Barrel (Optional)

LOADED CHAMBER INDICATOR

Your XD-M® firearm has a loaded chamber indicator (Figure 12-1). The indicator allows you to observe whether a cartridge is in the chamber. When a cartridge is in the chamber the indicator raises above the barrel (Figure 12-2). When the loaded chamber indicator is up, the firearm is loaded and is ready to fire.



Figure 12-1



Figure 12-2



Figure 17-1

STRIKER STATUS INDICATOR

Your XD-M® firearm has a cocking indicator in the rear of the slide (Figure 13-1). When the firearm is cocked, the pin will protrude out of the rear of the slide (Figure 13-2). (The cocking indicator does not always mean that the firearm is loaded). However, when the pin is out, always treat the firearm as if it is loaded. Only the Loaded Chamber Indicator will show if the firearm is loaded (See Page 12).

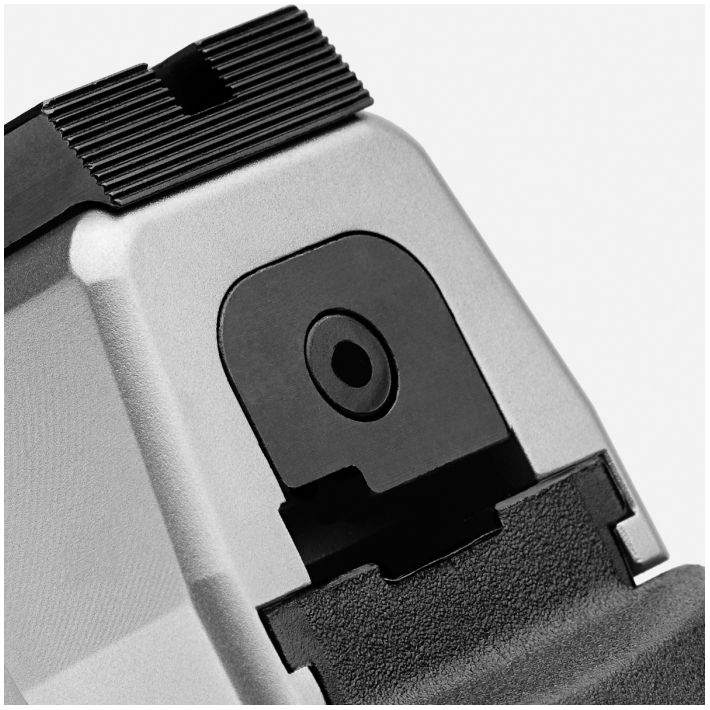

Figure 13-1



Figure 13-2

WARNING: Never trust a safety. Always assume the firearm is loaded.

WARNING: Even though the chamber is empty there may be cartridges in the magazine. The firearm is not completely unloaded until the magazine is removed and the chamber is empty.

CHANGE BACK STRAP

REMOVAL

- Carefully remove the back strap/lanyard roll pin by using a 3/32 punch, drifting the pin out. (DO NOT FORCE THE TAPERED SHAFT OF THE PUNCH INTO THE HOLE) (Figure 22-1).

- Grip bottom of back strap, lift up and away from grip (Figure 22-2).

NOTE: Use a flat sturdy platform. Make sure holes are aligned correctly.

INSTALLATION

- Starting at 45 degree angle from grip, insert upper portion of back strap into the frame. Rotate downward and install pin. (DO NOT FORCE THE TAPERED SHAFT OF THE PUNCH INTO THE HOLE) (Figure 22-3).


Figure 22-1


Figure 22-2


Figure 22-3

⚠ **MAKE SURE THE FIREARM IS COMPLETELY UNLOADED**

⚠ **MAGAZINE REMOVED AND CHAMBER IS CLEAR.**

FRONT FIBER OPTIC INSTALLATION

INSTALLATION

- With a suitable heat source; i.e. Butane lighter, carefully begin to melt one end of the filament by positioning it close to the flame until a bulb forms the same size as the pocket in the serrated face of the front sight. **DO NOT LET THE FILAMENT TOUCH THE FLAME AS THIS WILL CLOUD THE BULB** (Figure 23-1).

- Insert the filament into the sight from the serrated face of the sight and pull the filament through the sight until the bulb rests in the pocket (Figure 23-2).

- If the bulb is larger than the pocket, cut off the bulb only and repeat the melting process until the bulb fits properly.

- Now cut the filament with a razor blade or fingernail clippers approximately 1/16 of an inch longer than the sight. Using the same melting process form a bulb on the muzzle end of the sight locking the fiber optic filament in place (Figure 23-3).

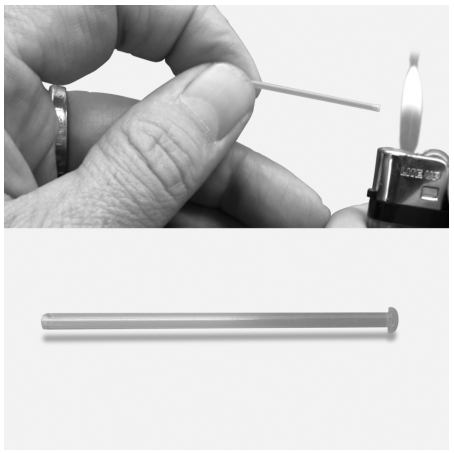

Figure 23-1



Figure 23-2



Figure 23-3

⚠ **MAKE SURE THE FIREARM IS COMPLETELY UNLOADED**

⚠ **MAGAZINE REMOVED AND CHAMBER IS CLEAR.**

OSP™ PLATE INSTALLATION

Your OSP™ Pistol can be easily configured to accept a variety of red dot sights by removing the filler plate and installing the correct mount for your sight application.

To remove the filler plate simply use a T-10 wrench and remove the three M3 anchoring screws (Figure 34-1). **Keep these screws with the filler plate.**

Choose the correct mounting plate for your red dot sight. First test fit the sight to the mounting plate with the screws provided with your red dot sight. Make sure that the screws do not protrude below the bottom surface of the mounting plate. If they do, the screws must be shortened until they are slightly above the bottom surface of the plate.

Once the test fitting is successful remove the sight from the plate and install the plate with the three M3 provided screws (Figure 34-2). If needed apply removable thread locking compound such as Loctite 242 to insure the mounting screws remain tight.

Installation is now complete.

Each mounting plate is optimized for a specific red dot sight. Other sights may fit some plates but will require sight mounting screws with the same thread pitch as the mount incorporates.

STEP 1: Using a T 10 six point key, remove 3 screws that retain the OSP™ Cover Plate (Figure 35-1).

STEP 2: Install the optics plate, specific for your sight application, to the slide with the 3 screws from step #1 (Figure 35-2).

STEP 3: Install the optic with 6-48 screws (Figure 35-3).

STEP 4: If you chose to use a thread locking compound, use sparingly and on screws only. Using too much thread locker can foul mechanism (Figure 35-4).

NOTE: Screws for optic may require shortening. Screws cannot protrude more than 0.095” (2.4mm) from the bottom of the sight system (Figure 35-5).

NOTE: After installation of your optic, test fire to verify proper function.

NOTE: Be aware of design differences in Optics Ready platforms and mounting plates, and possible variations of installation screws, such as, thread pitch, length, head geometry, etc. Refer to manufacturer’s instructions for details.



Figure 34-1



Figure 34-2



Figure 35-1



Figure 35-2



Figure 35-3

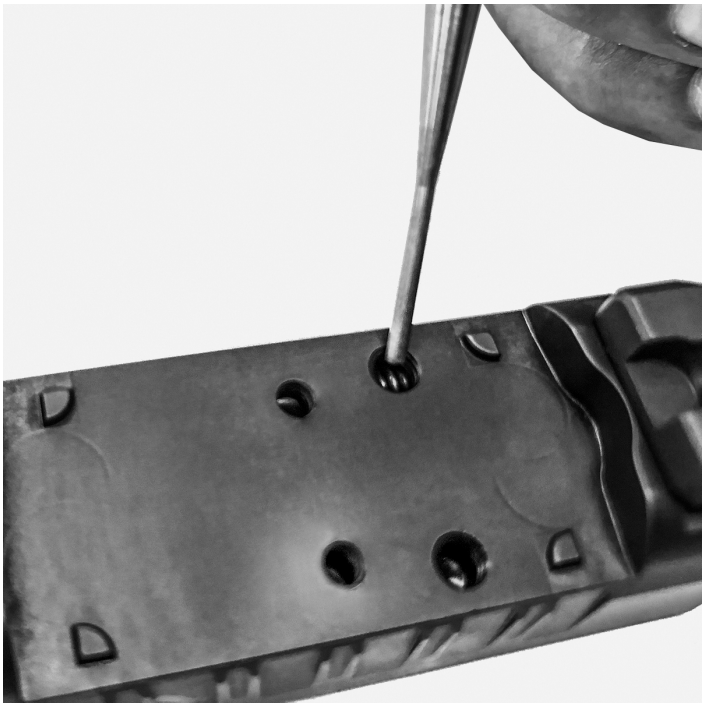

Figure 35-4

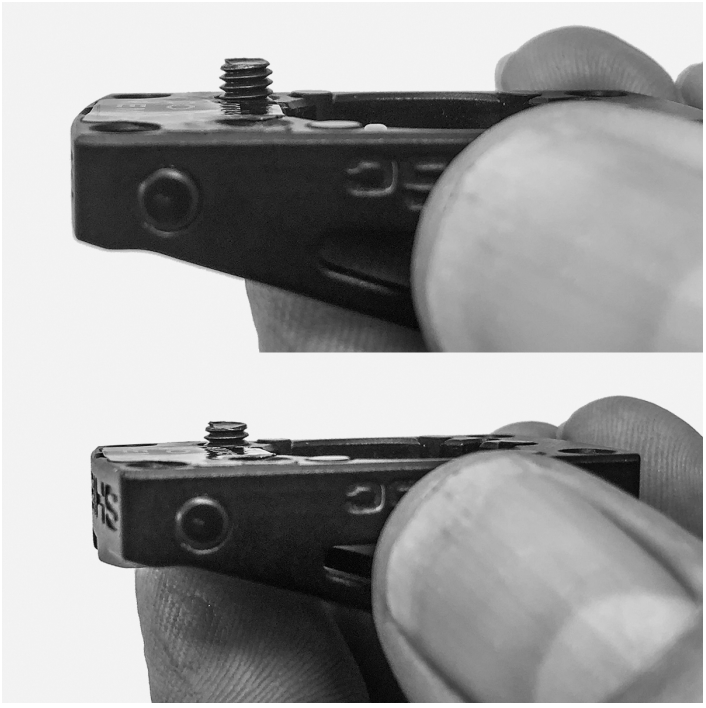

Figure 35-5

⚠ MAKE SURE THE FIREARM IS COMPLETELY UNLOADED

⚠ MAGAZINE REMOVED AND CHAMBER IS CLEAR.

SAFETY RULES

READ AND UNDERSTAND THESE SAFETY RULES

BE A SAFE SHOOTER.

ACCIDENT *(ak´ si dent) N. 1. An unintentional or unexpected happening that is undesirable or unfortunate, especially one resulting in injury, damage, harm or loss.*

DON'T BE THE CAUSE OF AN ACCIDENT.

A responsible firearm owner is safety minded and always handles firearms in a safe manner by following the basic rules of safe shooting and by using common sense in the handling of a firearm.

Store firearms unloaded, locked, and in a secure place. Keep keys for locks separate from lock and in a secure place away from children. Keep firearms out of reach of children. You are responsible for children's safety.

BE A RESPONSIBLE GUN OWNER.

- Treat all firearms as if they are loaded at all times.
- Never point a firearm at any person or thing you do not intend to shoot.
- Keep your finger off the trigger until you are on target and have made the DECISION to fire.
- Be sure you have positively identified your target.
- ALWAYS KEEP THE MUZZLE POINTED IN A SAFE DIRECTION.
- Do not drop your firearm. Make sure you maintain control of your firearm at all times. If it falls, it may fire. If you do drop it, unload it and examine it to be sure it works correctly. Do not attempt to fire it again until you have completed this safety check.
- Never put your hand over the muzzle of the firearm.
- Keep your finger(s) off the trigger and out of the trigger guard until you are actually aiming at your target, and made the decision to fire.
- Under no circumstances should the owner/purchaser of this firearm allow it to come into possession of or be handled by small children or a mentally handicapped individual.
- DO NOT COVER THE EJECTION PORT WITH YOUR HANDS WHEN LOADING/UNLOADING YOUR FIREARM.

TREAT EVERY GUN AS IF IT IS LOADED ... ALL THE TIME.

BE A RESPONSIBLE FIREARM OWNER!

- Never rely on a firearm's "safety features" to protect you from unsafe firearm handling. A safety is only a mechanical device, not a substitute for common sense.

- Keep your finger off the trigger until you are on target and have made the DECISION to fire.

- Be sure of your target and backstop before you shoot. Ask yourself what your bullet will hit if it misses or goes through the target.

- Before shooting, be sure the barrel is clear of obstructions, including excessive oil and grease.

- Do not let water, snow, mud or other materials enter the barrel.

- Do not pull a firearm toward you by the muzzle.

- Always hold your firearm so you control the direction of its muzzle in case you fall or stumble.

- **ALWAYS KEEP THE MUZZLE POINTED IN A SAFE DIRECTION.**

- If anything does get into the barrel, remove cartridges, and clean bore immediately before attempting to shoot. Obstructed barrels can burst and injure you and/or bystanders.

- Maintain possession of your firearm at all times when you are on the firing range or during target practice. **DO NOT ALLOW OTHERS TO HANDLE YOUR FIREARM UNLESS THAT PERSON IS BEING INSTRUCTED OR TRAINED.**

- **DO NOT COVER THE EJECTION PORT WITH YOUR HANDS WHEN LOADING/UNLOADING YOUR FIREARM.**

BE A SAFE FIREARM OWNER!

- **ALWAYS KEEP THE MUZZLE POINTED IN A SAFE DIRECTION.**

- Firearms and alcohol or drugs do not mix. Do not take them before or during shooting activities. Your vision, coordination and judgment could be impaired, making firearm

handling unsafe.

- When taking medication, seek a doctor's advice to be sure you can operate and handle your firearm safely.
- Receive training from a competent firearms instructor before using any firearm.
- Before attempting to shoot, practice operations by using snap caps (dummy rounds). Become familiar with the safety features, trigger control, and handling of the firearm.
- Make sure you maintain control of your firearm at all times.
- **Always keep and carry your firearm with an empty chamber until you intend to shoot, so your firearm cannot be fired unintentionally.**
- Firearms should be unloaded when not in use. This means both the chamber and magazine are empty.
- When transferring a firearm by hand, always open the action and check to assure that it is unloaded prior to handing it over to someone.
- Never take anyone's word that a firearm is unloaded. When receiving a firearm, always open the action and check that it is unloaded.
- Do not try to change your firearm's trigger pull, because alterations of trigger pull usually affect sear engagement and might cause accidental firing.
- Never use a firearm that jams or fails to function properly. Should this occur, return to Springfield, Inc. for warranty/repair.
- If your shot sounds weak or underpowered, it could mean a bullet is in the chamber/bore. The gun should be immediately unloaded and the chamber/bore checked for obstructions before refiring.

- DO NOT "HORSEPLAY" with a firearm. Your firearm cannot think ...but you can. Firearm safety depends on you.

IMPORTANT WARNING

There is no safe way to discharge a firearm in a home or apartment. Bullets will go through walls, floors, furniture, and appliances and still cause serious injury or death to persons in the house, next-door, or outside. Accidental discharges indoors ALWAYS result in property damage or personal injury.

READ THESE RULES!

- Load firearm only when on range preparing to fire. Unload it before leaving range.
- Treat every firearm as if it is loaded ... all the time!
- Load and unload with the firearm muzzle pointed in a safe direction.
- Be certain firearm is unloaded before cleaning.
- Completely unload your firearm before storing, travelling, standing it against an object, laying it down, entering a house, car, truck, boat, RV/camper, building, or handing it to someone.
- **Never leave a loaded firearm unattended.**
- Tragedy may result if a child finds your firearm and plays with it. Keep every firearm secure. Children do not believe firearms can kill.
- Store firearms and ammunition separately. Both should be placed beyond children's reach.
- Obey all laws regarding the storage and security of firearms in the home.
- Know and obey the laws regarding the transportation and carrying of firearms.

- **Never carry any firearm, loaded or unloaded, in your pocket, purse or tucked in your belt or waistband. Use a firearm case or a proper holster.**

- **Old or reloaded ammunition may cause damage to the firearm and/or injure you or others. Use only clean, dry, original, high-quality, commercially manufactured ammunition. Using reloaded ammunition may void the warranty.**

- **ALWAYS REMEMBER, THE PISTOL IS NOT UNLOADED UNTIL THE MAGAZINE IS REMOVED AND THE CHAMBER IS EMPTY.**

- **DO NOT COVER THE EJECTION PORT WITH YOUR HANDS WHEN LOADING/UNLOADING YOUR FIREARM.**

TREAT EVERY FIREARM AS IF IT IS LOADED... ALL THE TIME!

- Many ammunition identifications sound similar. Make sure you use the right caliber/size ammunition in your firearm.

- If firearm fails to fire when the trigger is pulled, keep it pointed at the target for at least 30 seconds. Remove the magazine before opening the action. Remove the cartridge from the chamber. Sometimes slow primer ignition will cause a “hang fire” and the cartridge will go off after a short pause.

- When group firing, always appoint someone to maintain safety control. Obey his/her commands immediately and completely.

- While shooter is loading, firing, and unloading, spectators need to remain behind shooter.

- **Always wear protective glasses when shooting.**

- **Always wear hearing protection when shooting.**

- Never shoot at hard flat surfaces or water; bullets will ricochet unpredictably.

- Do not alter or modify your firearm.
- Have your firearm serviced regularly by a qualified pistolsmith.
- Discharging firearms in poorly ventilated areas, cleaning firearms, or handling ammunition may result in exposure to lead and other substances known to cause birth defects, reproductive harm, cancer and other serious physical injury. Have adequate ventilation at all times. Wash hands thoroughly after firing your firearm, after cleaning your firearm, or whenever you have handled ammunition.
- Always use quality ammunition.
- **ALWAYS KEEP THE MUZZLE POINTED IN A SAFE DIRECTION.**
- **DO NOT COVER THE EJECTION PORT WITH YOUR HANDS WHEN LOADING/UNLOADING YOUR FIREARM.**

HANDLING

WE WANT YOU TO BE A SAFE, SATISFIED SHOOTER.

Before attempting to load this firearm with live ammunition, follow the sequence of operations shown here without ammunition or with snap caps. By practicing operations with snap caps, you will become familiar with:

- Safety features,
- Trigger control (snap caps),
- Handling of your firearm.

As a result you will be a safer, more confident shooter when aiming at your first target.

NOTE: Extensively dry firing can accelerate component wear/stress. Use snap caps if dry firing on a regular basis.

Write, call or email us concerning any items you do not understand and/or which might relate to your safety and the safe operations of any of our products. Springfield, Inc.

Consumer Safety Department 420 West Main Street Geneseo, IL 61254 (309) 944-5631 1-800-680-6866 cs@springfield-armory.com

WARNING: Always wear eye & ear protection when using any firearm.

WARNING: The firearm is a dangerous weapon if not handled properly.

WARNING: When you squeeze the trigger, you must expect the firearm to fire. You must take full responsibility for firing it. Your care can avoid accidental discharge and thereby avoid accidental injury and death.

WARNING: Always have firearm pointed in a safe direction. Failure to obey safety information may result in injury to you or others.

TRIGGER SAFETY

The trigger safety blocks the trigger from moving backward. A lever incorporated into the trigger (Figure 14-1) deactivates the safety when completely depressed while pulling the trigger. The trigger can only be pulled if depressed together with the trigger safety lever (Figure 14-2).

NOTE: DEPRESSING THE TRIGGER SAFETY AND PULLING THE TRIGGER WILL NOT ALLOW THE FIREARM TO FIRE UNLESS THE GRIP SAFETY IS DEPRESSED.



Figure 14-1



Figure 14-2

GRIP SAFETY

The grip safety is located at the top rear of the firearm grip (Figure 15-1). The grip safety must be depressed to be deactivated. Unless the grip safety is properly depressed and deactivated, the firearm will not fire even if the trigger is pulled. Grip safety must also be depressed to allow slide to be pulled to the rear. The grip safety is designed to be deactivated when the firearm is properly gripped to fire (Figure 15-2). To fire the firearm you must properly hold the firearm, and depress the grip safety, and then put your finger on the trigger to depress the trigger safety and pull the trigger. To assure the most reliable function, it is necessary to properly grip firearm.

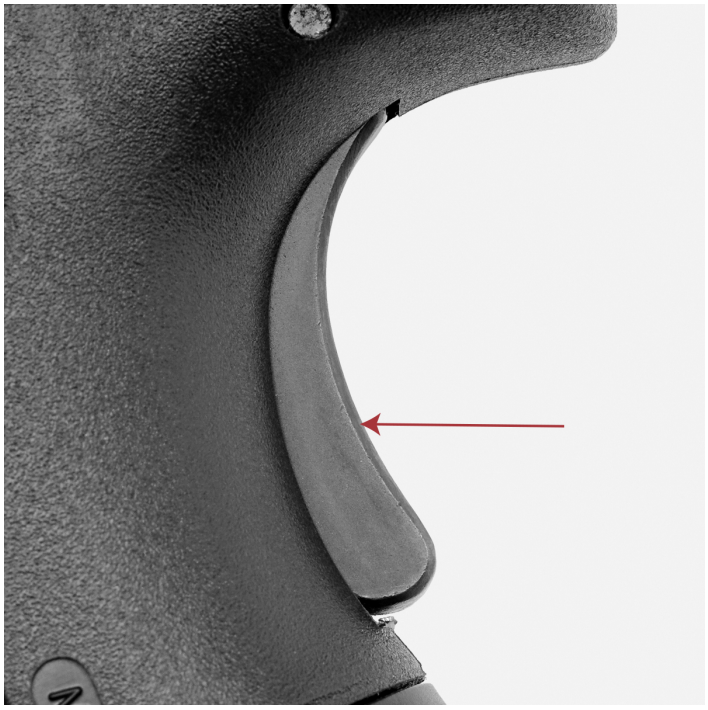

Figure 15-1



Figure 15-2

STRIKER BLOCK SAFETY

As an added safety feature, an internal striker block will prevent the firearm from firing until the grip safety is depressed and the trigger is pulled.

MAGAZINE DISCONNECT

Some XD-M Elite pistols are available with a magazine disconnect. These pistols will **NOT** fire when the magazine is removed.

To determine if your pistol has a magazine disconnect, observe the top of the slide at the loaded chamber indicator position. Pistols with the magazine disconnect feature will have this verbiage at the loaded chamber indicator location: "Loaded When Up" (Figure 17-1).



Figure 17-1

⚠ ALWAYS REMOVE YOUR FINGER FROM THE TRIGGER AND FROM THE TRIGGER GUARD WHEN REMOVING A MAGAZINE. FAILURE TO DO SO COULD RESULT IN AN UNINTENDED DISCHARGE!

⚠ NEVER REMOVE THE MAGAZINE WITH YOUR FINGER ON OR NEAR THE TRIGGER!

WARNING: Safety devices, like all things mechanical, can fail. Safety devices are not a substitute for safe firearm handling. Always follow the rules for safe firearm handling.

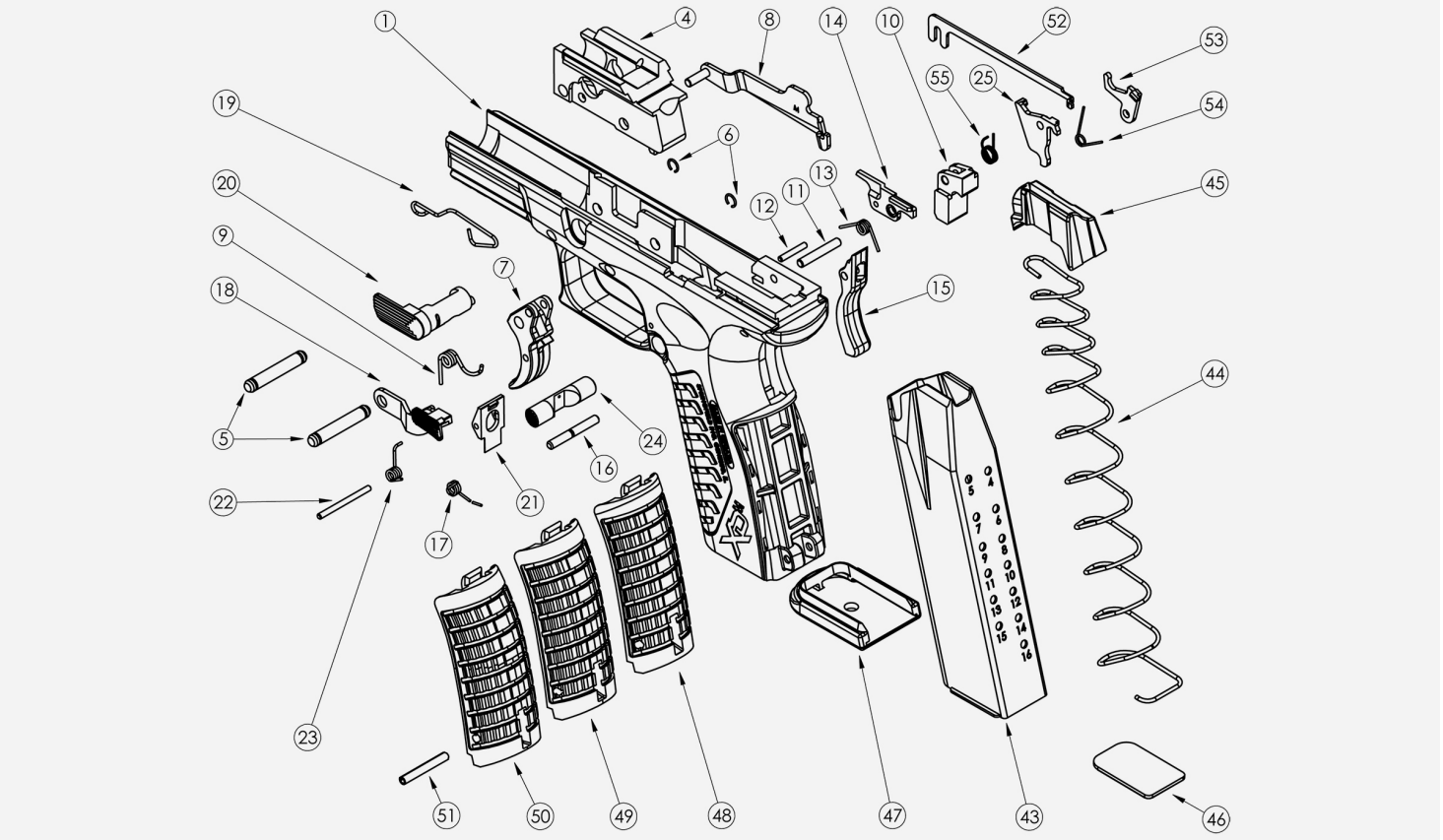

Pg37-Frame

1 Frame

4 Locking Block

5 Locking Block Pin/Trigger Pin -2

6 Locking Block Pin/Trigger Pin Retainer - 2

7 Trigger with Safety

8 Trigger Bar

9 Trigger Bar Spring

10 Sear

11 Sear Pin

12 Ejector Pin

13 Sear Spring

14 Ejector

15 Grip Safety

16 Grip Safety Pin

17 Grip Safety Spring

18 Slide Stop Lever

19 Slide Stop Lever Spring

20 Disassembly Lever

21 Magazine Catch

22 Magazine Catch Pin

23 Magazine Catch Spring

24 Magazine Release Button

25 Striker Safety Lever

43 Magazine Body

44 Magazine Spring

45 Magazine Follower

46 Magazine Locking Plate

47 Magazine Base

48 Backstrap -1

49 Backstrap - 2

50 Backstrap - 3

51 Backstrap/Lanyard Loop Roll Pin

52 Disassembly Bar

53 Disassembler

54 Disassembly Lever Spring

55 Striker Safety Lever Spring

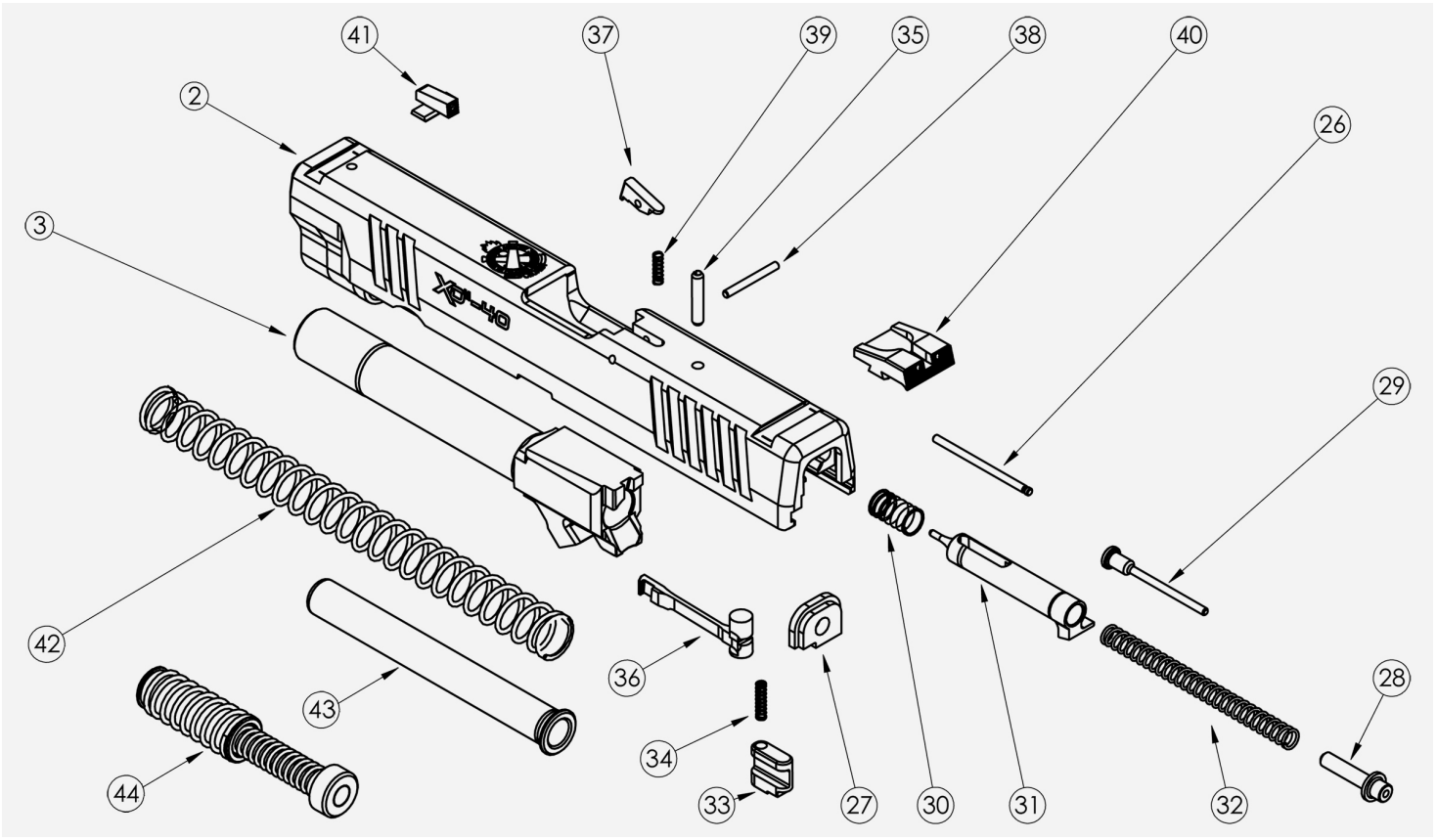

Pg39-Slide

2 Slide

3 Barrel

26 Striker Safety Pin

27 Striker Locking Plate

28 Striker Spring Guide

29 Striker Status Indicator

30 Striker Dampening Spring

31 Striker

32 Striker Spring

33 Striker Safety

34 Striker Safety Spring

35 Striker Retainer Pin

36 Extractor

37 Loaded Chamber Indicator

38 Loaded Chamber Indicator Pin

39 Loaded Chamber Indicator Spring

40 Rear Sight

41 Front Sight

42 Recoil Spring

43 Recoil Spring Guide Rod

44 Recoil Spring Assembly (Captive Style On 3.8" Model)

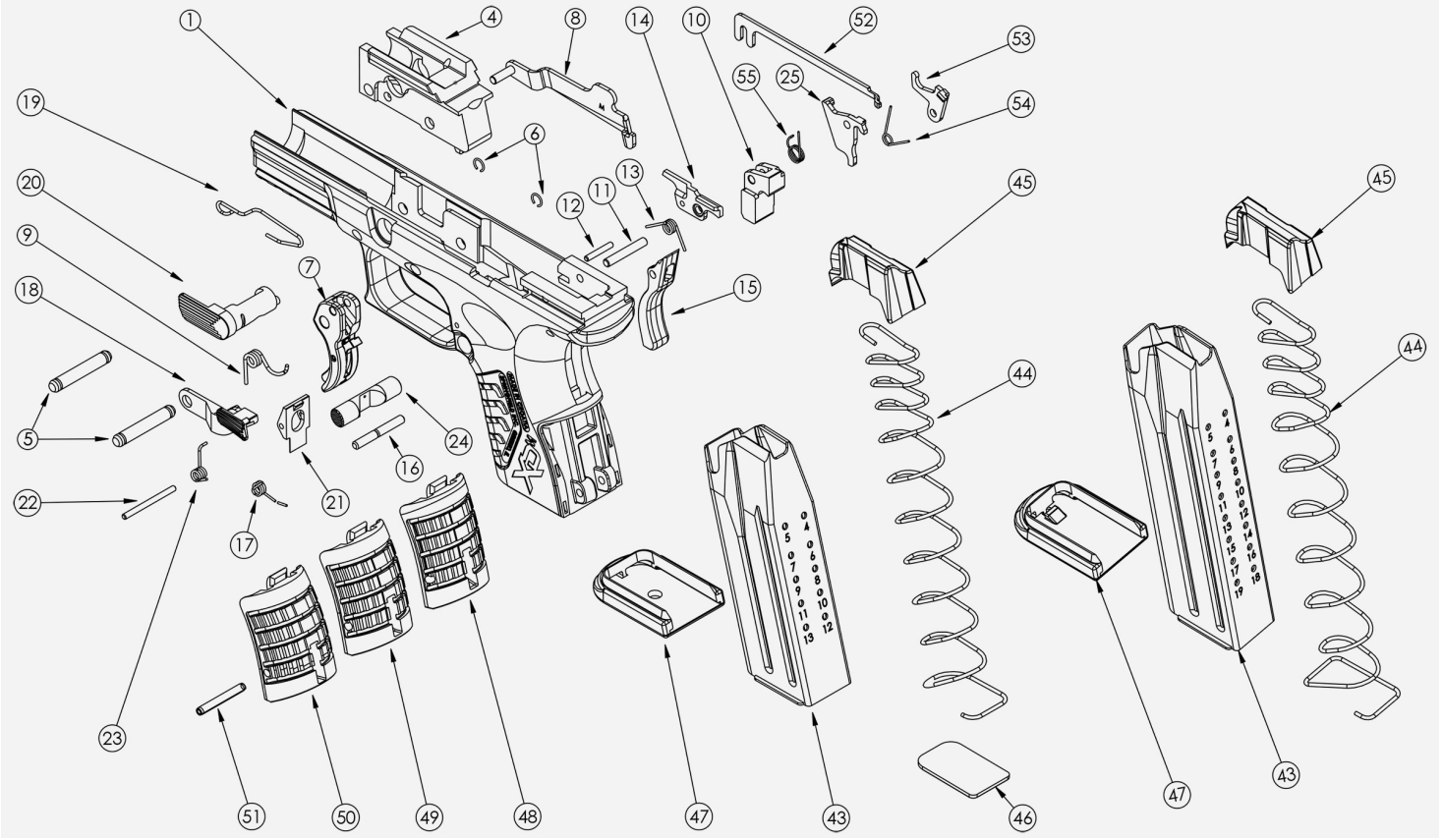

Pg41-CompactFrame

1 Frame

4 Locking Block

5 Locking Block Pin/Trigger Pin - 2

6 Locking Block Pin/Trigger Pin Retainer - 2

7 Trigger with Safety

8 Trigger Bar

9 Trigger Bar Spring

10 Sear

11 Sear Pin

12 Ejector Pin

13 Sear Spring

14 Ejector

15 Grip Safety

16 Grip Safety Pin

17 Grip Safety Spring

18 Slide Stop Lever

19 Slide Stop Lever Spring

20 Disassembly Lever

21 Magazine Catch

22 Magazine Catch Pin

23 Magazine Catch Spring

24 Magazine Release Button

25 Striker Safety Lever

43 Magazine Body

44 Magazine Spring

45 Magazine Follower

46 Magazine Locking Plate

47 Magazine Base

48 Backstrap - 1

49 Backstrap - 2

50 Backstrap - 3

51 Backstrap/Lanyard Loop Roll Pin

52 Disassembly Bar

53 Disassembler

54 Disassembly Lever Spring

55 Striker Safety Lever Spring

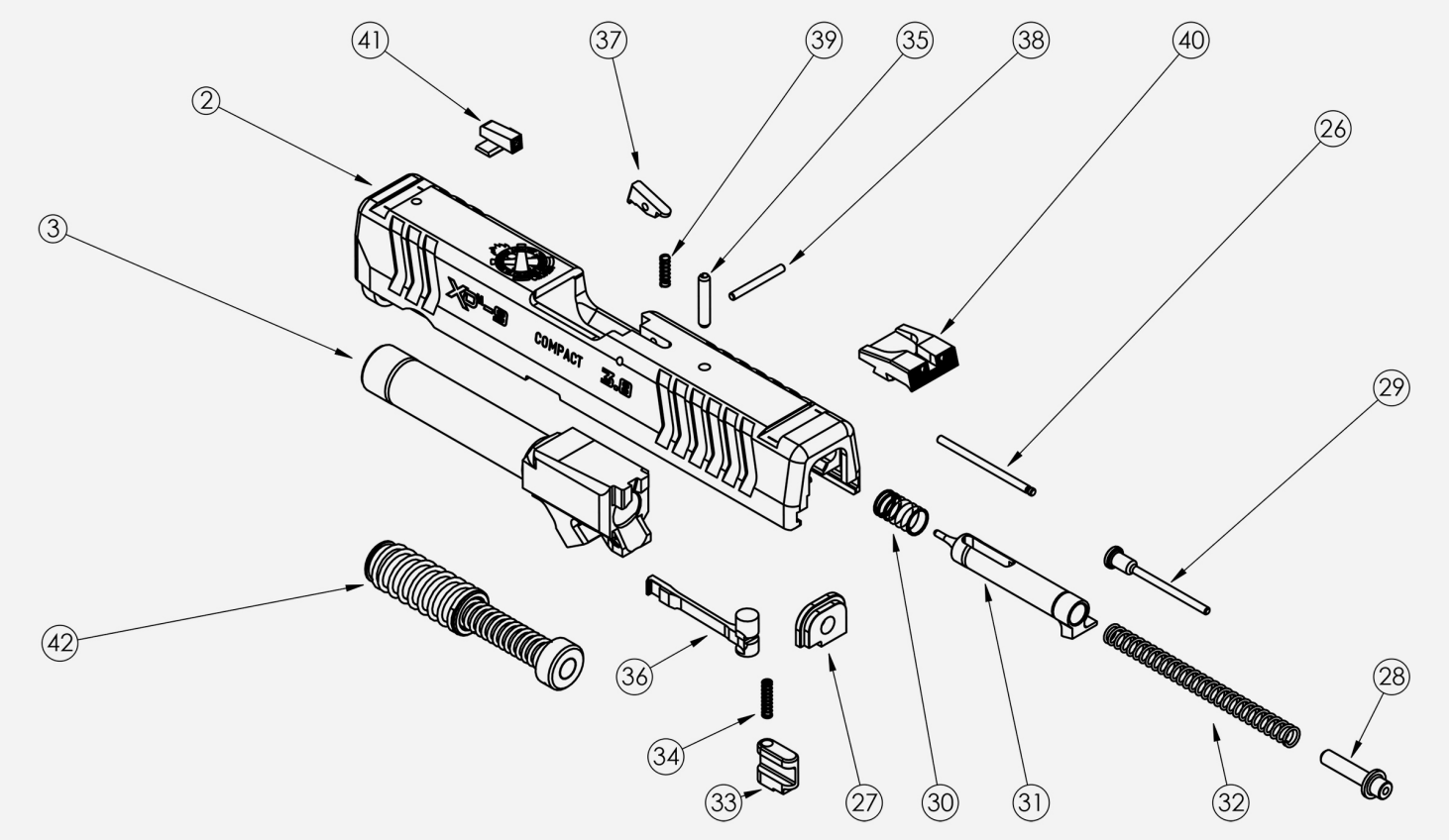

Pg43-CompactSlide

2 Slide

3 Barrel

26 Striker Safety Pin

27 Striker Locking Plate

28 Striker Spring Guide

29 Striker Status Indicator

30 Striker Dampening Spring

31 Striker

32 Striker Spring

33 Striker Safety

34 Striker Safety Spring

35 Striker Retainer Pin

36 Extractor

37 Loaded Chamber Indicator

38 Loaded Chamber Indicator Pin

39 Loaded Chamber Indicator Spring

40 Rear Sight

41 Front Sight

42 Recoil Spring

43 Recoil Spring Guide Rod

44 Recoil Spring Assembly (Captive Style On 3.8" Model)

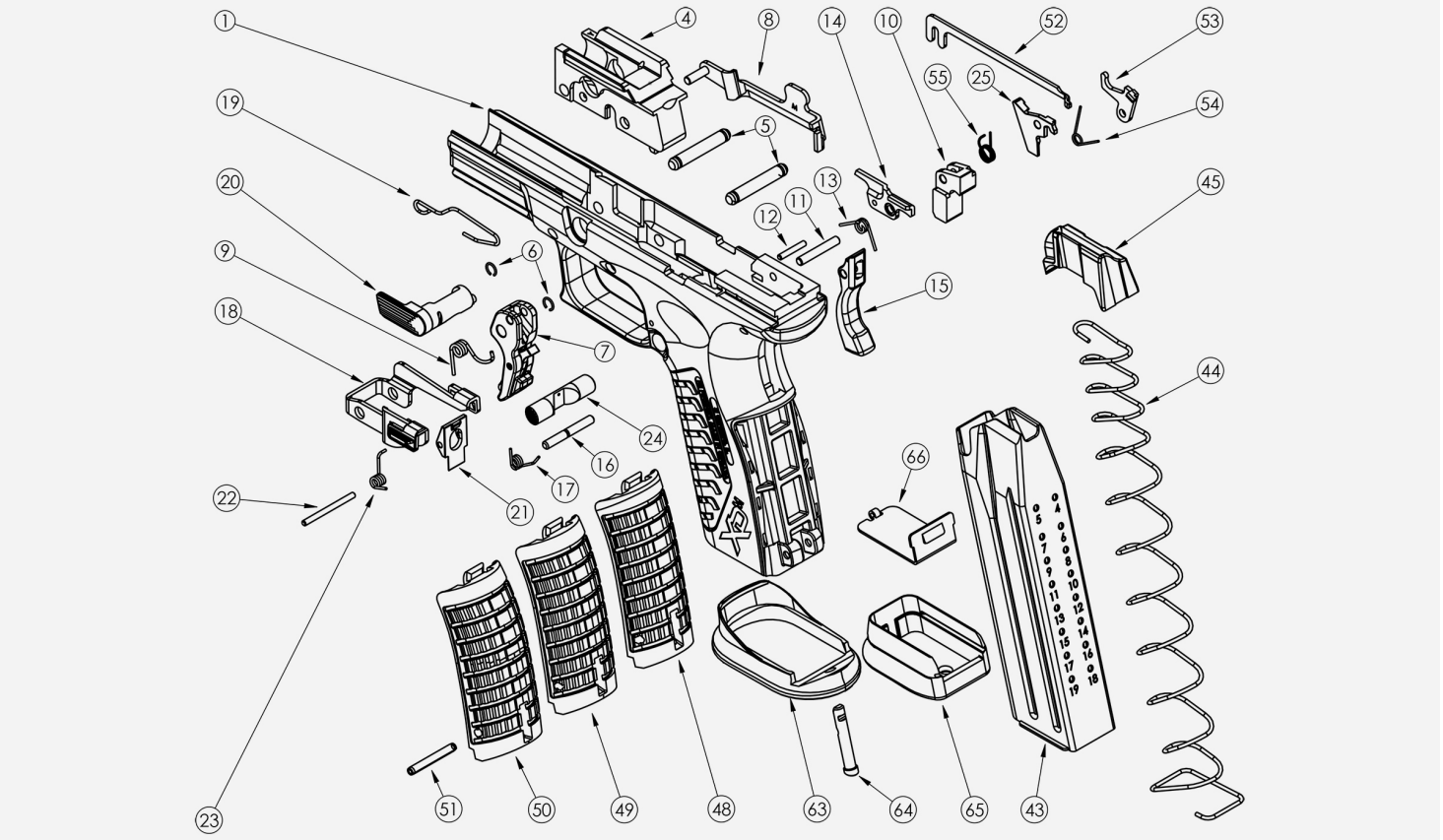

Pg45-EliteFrame

1 Frame

4 Locking Block

5 Locking Block Pin/Trigger Pin - 2

6 Locking Block Pin/Trigger Pin Retainer - 2

7 Trigger with Safety

8 Trigger Bar

9 Trigger Bar Spring

10 Sear

11 Sear Pin

12 Ejector Pin

13 Sear Spring

14 Ejector

15 Grip Safety

16 Grip Safety Pin

17 Grip Safety Spring

18 Slide Stop Lever

19 Slide Stop Lever Spring

20 Disassembly Lever

21 Magazine Catch

22 Magazine Catch Pin

23 Magazine Catch Spring

24 Magazine Release Button

25 Striker Safety Lever

43 Magazine Body

44 Magazine Spring

45 Magazine Follower

46 Magazine Locking Plate

47 Magazine Base

48 Backstrap - 1

49 Backstrap - 2

50 Backstrap - 3

51 Backstrap/Lanyard Loop Roll Pin

52 Disassembly Bar

53 Disassembler

54 Disassembly Lever Spring

55 Striker Safety Lever Spring

63 Short Magwell

64 Magwell Pin

65 Standard Magwell

66 Magazine Extension Plate

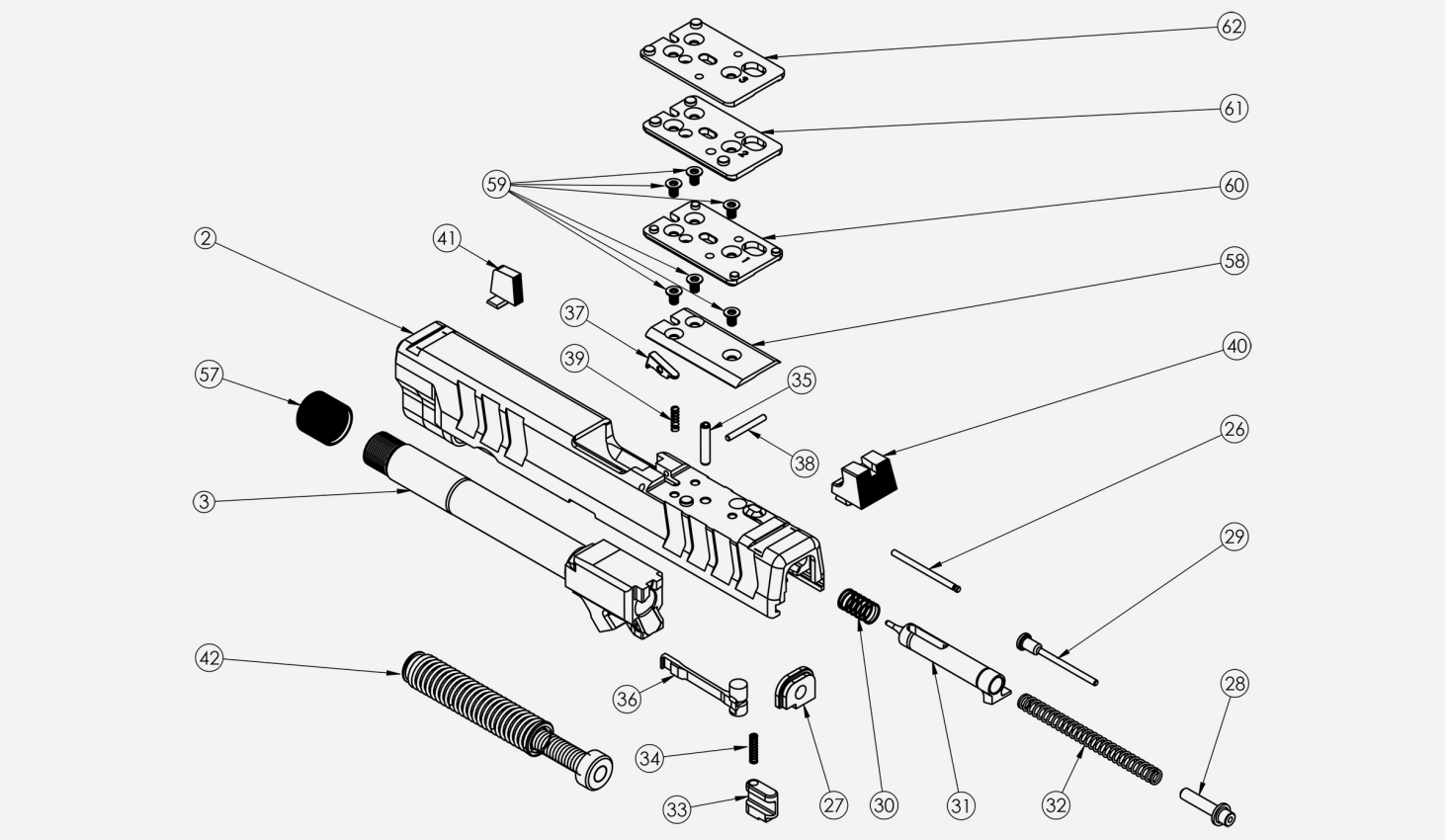

Pg47-EliteOSPSlide

2 Slide

3 Barrel

26 Striker Safety Pin

27 Striker Locking Plate

28 Striker Spring Guide

29 Striker Status Indicator

30 Striker Dampening Spring

31 Striker

32 Striker Spring

33 Striker Safety

34 Striker Safety Spring

35 Striker Retainer Pin

36 Extractor

37 Loaded Chamber Indicator

38 Loaded Chamber Indicator Pin

39 Loaded Chamber Indicator Spring

40 Rear Sight

41 Front Sight

42 Recoil Spring

57 Thread Protector

58 Cover Plate

59 Torx Screws - T10

60 Plate 1

61 Plate 2

62 Plate 3

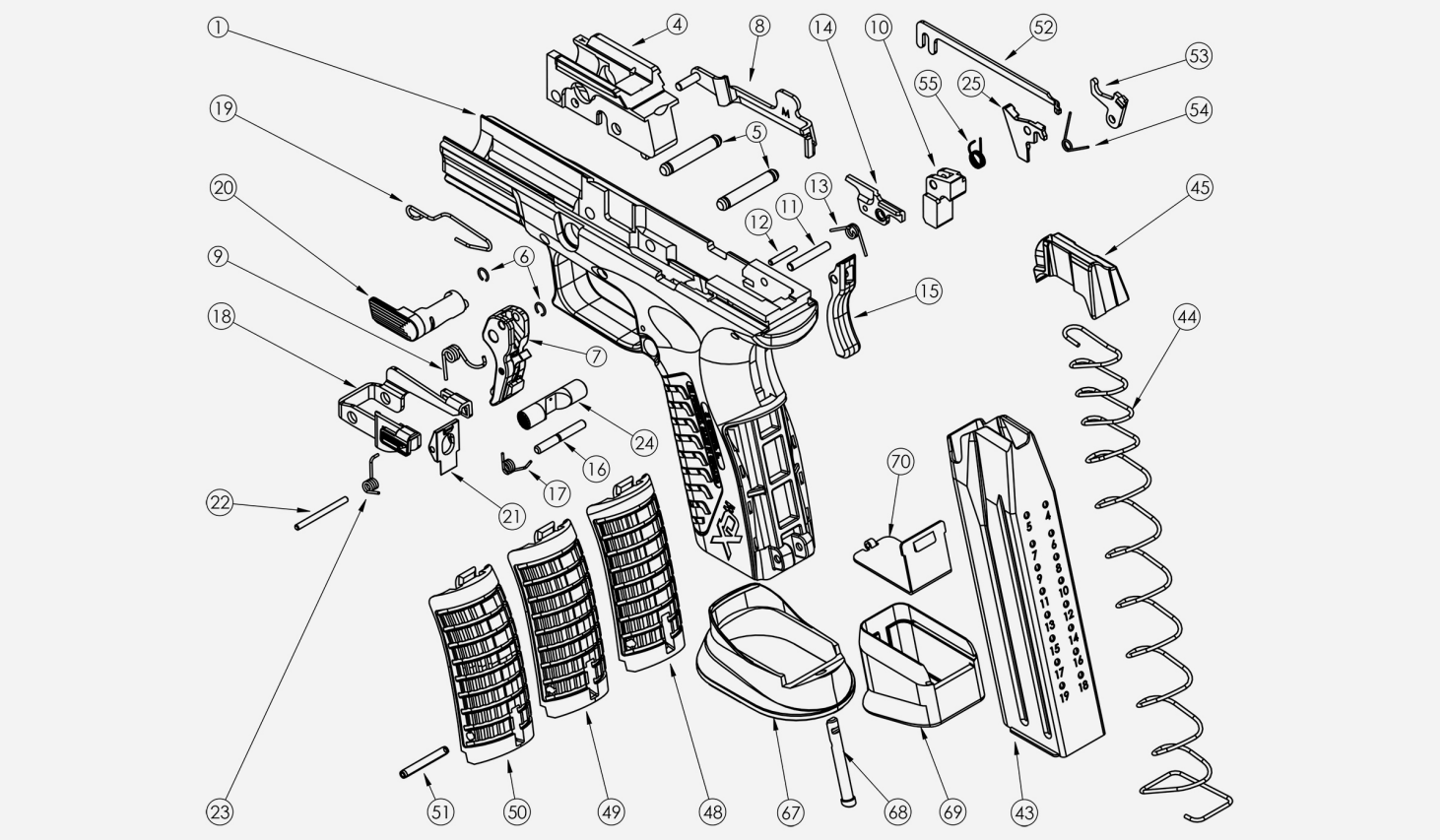

Pg49-EliteOSPFrame

1 Frame

4 Locking Block

5 Trigger Pin

6 Trigger Pin Safety

7 Trigger with Safety

8 Trigger Bar

9 Trigger Bar Spring

10 Sear

11 Sear Pin

12 Small Sear Pin

13 Sear Spring

14 Ejector

15 Grip Safety

16 Grip Safety Pin

17 Grip Safety Spring

18 Slide Stop Lever

19 Slide Stop Lever Spring

20 Disassembly Lever

21 Magazine Catch

22 Magazine Catch Pin

23 Magazine Catch Spring

24 Magazine Release Button

25 Striker Safety Lever

43 Magazine Body

44 Magazine Spring

45 Magazine Follower

48 Backstrap - 1

49 Backstrap - 2

50 Backstrap - 3

51 Backstrap/Lanyard Loop Roll Pin

52 Disassembly Bar

53 Disassembly Lever

54 Disassembly Lever Spring

55 Striker Safety Lever Spring

67 Standard Magwell

68 Magwell Pin

69 Magazine Extension Plate

70 Magazine Extension Plate

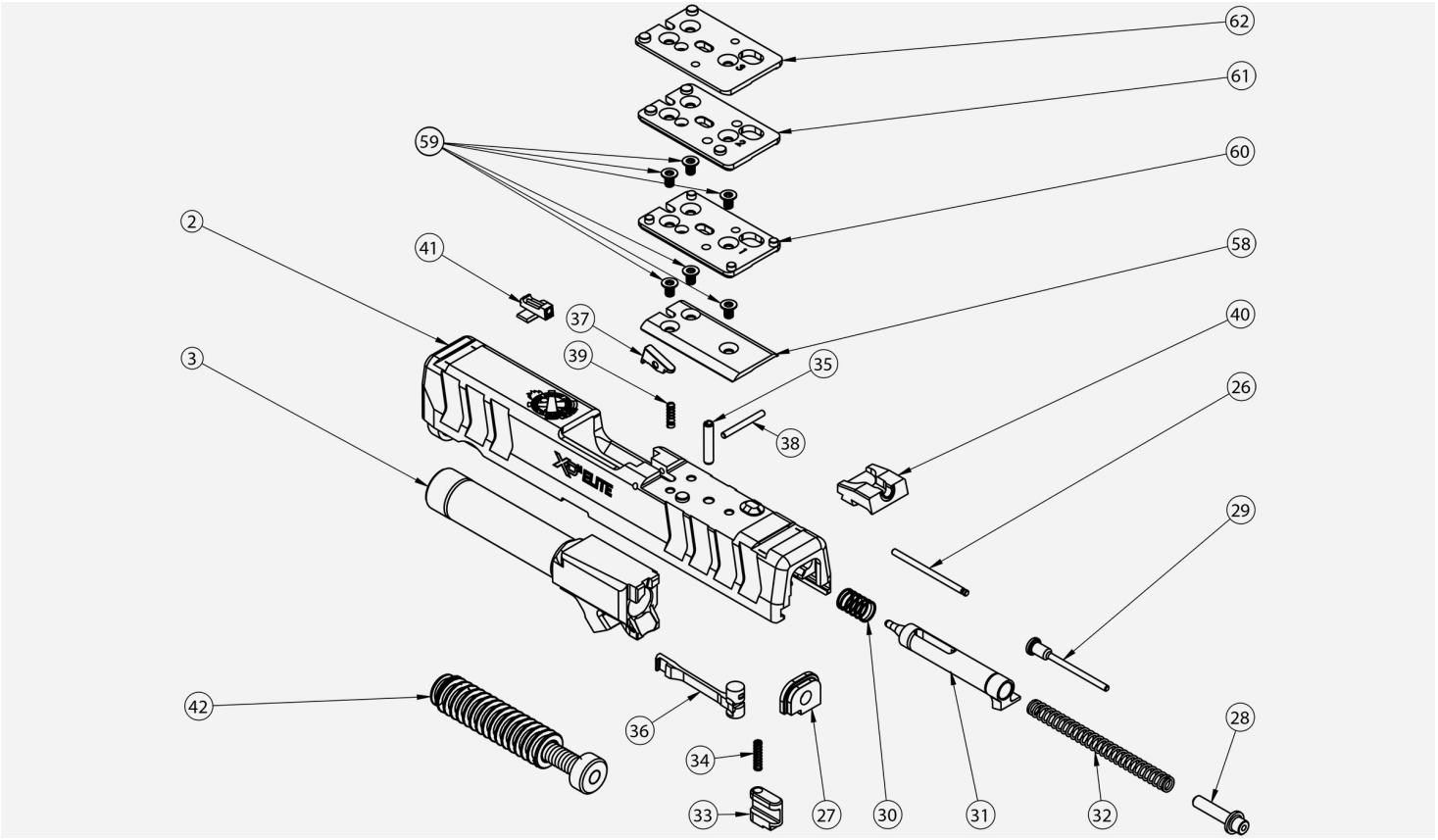

Pg51-EliteOSPCompactSlide

2 Slide

3 Barrel

26 Striker Safety Pin

27 Striker Locking Plate

28 Striker Spring Guide

29 Striker Status Indicator

30 Striker Dampening Spring

31 Striker

32 Striker Spring

33 Striker Safety

34 Striker Safety Spring

35 Striker Retainer Pin

36 Extractor

37 Loaded Chamber Indicator

38 Loaded Chamber Indicator Pin

39 Loaded Chamber Indicator Spring

40 Rear Sight

41 Front Sight

42 Recoil Spring

58 Cover Plate

59 Torx Screws - T10

60 Plate 1

61 Plate 2

62 Plate 3

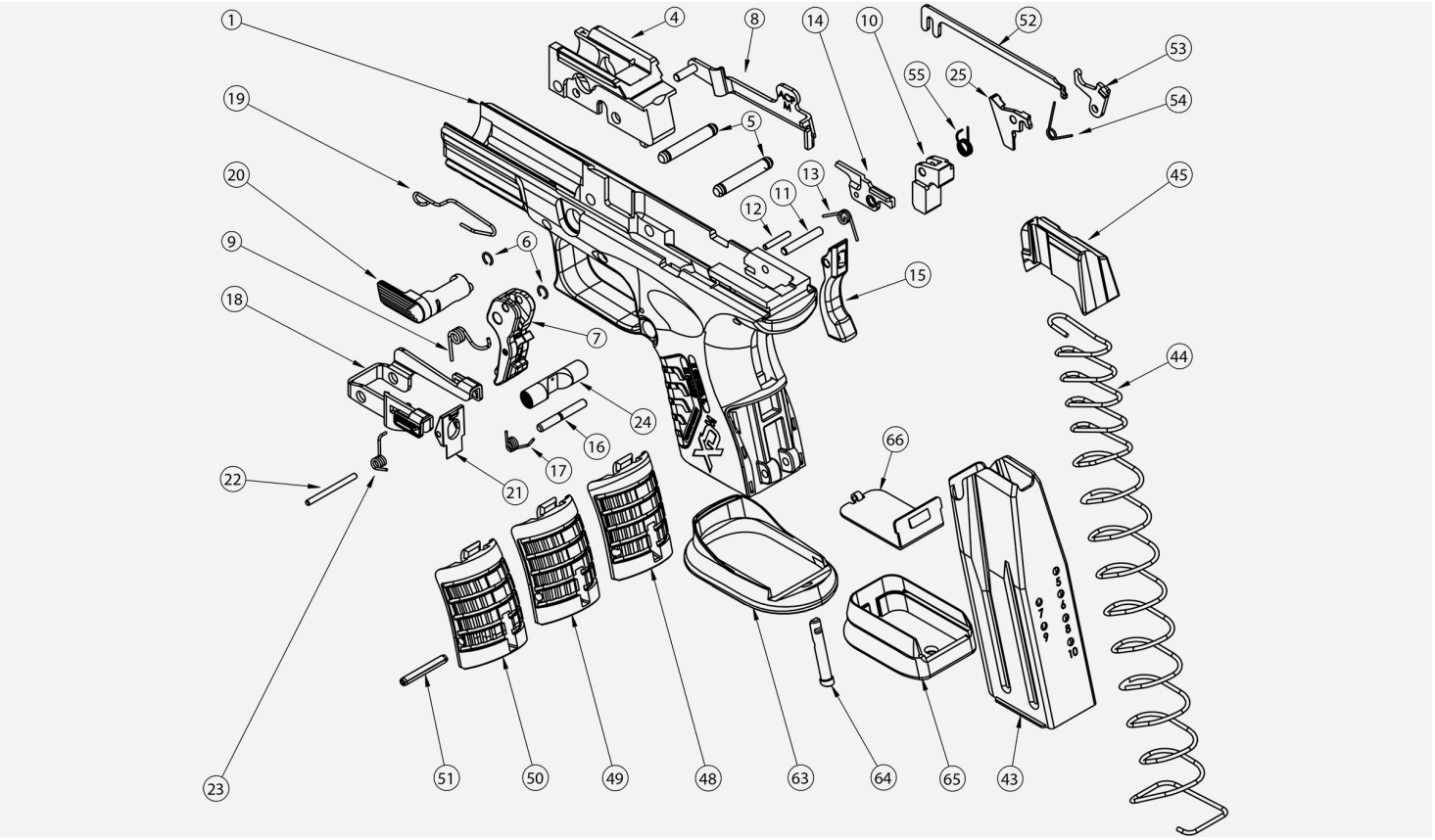

Pg53-EliteOSPCompactFrame

1 Frame

4 Locking Block

5 Trigger Pin

6 Trigger Pin Safety

7 Trigger with Safety

8 Trigger Bar

9 Trigger Bar Spring

10 Sear

11 Sear Pin

12 Small Sear Pin

13 Sear Spring

14 Ejector

15 Grip Safety

16 Grip Safety Pin

17 Grip Safety Spring

18 Slide Stop Lever

19 Slide Stop Lever Spring

20 Disassembly Lever

21 Magazine Catch

22 Magazine Catch Pin

23 Magazine Catch Spring

24 Magazine Release Button

25 Striker Safety Lever

43 Magazine Body

44 Magazine Spring

45 Magazine Follower

48 Backstrap - 1

49 Backstrap - 2

50 Backstrap - 3

51 Backstrap/Lanyard Loop Roll Pin

52 Disassembly Bar

53 Disassembly Lever

54 Disassembly Lever Spring

55 Striker Safety Lever Spring

63 Short Magwell

64 Magwell Pin

65 Magazine Extension

66 Magazine Extension Plate

LOADING/PREPARING TO FIRE

1. Place the **EMPTY** magazine in the magazine well, located in bottom of firearm grip. Make sure the magazine is **EMPTY** or you will inadvertently load the firearm. Push firmly enough on bottom of magazine to make sure it is properly seated. A distinctive “click” will confirm the magazine has been properly inserted. Pull the slide completely to the rear until it locks back.

---

2. Depress magazine release and remove magazine.

---

3. Ensure that you are using the proper caliber ammunition for your firearm. Place rim of first cartridge on front of follower (Figure 16) then push the cartridge down on the follower and slide the cartridge under the lips of the magazine completely to the rear. Load successive rounds by pushing cartridge down on previously loaded cartridge. Use only clean, dry, original, high-quality, commercially manufactured ammunition. Using reloaded ammunition may void warranty.

---

4. **POINT FIREARM IN A SAFE DIRECTION AND KEEP FINGER OFF TRIGGER.** Re-insert **LOADED** magazine into magazine well, located in bottom of firearm grip. Push firmly enough on bottom of magazine to make sure it is properly seated. **Caution: Do not slam or forcefully jam magazine into magazine well.**

---

5. Depress the slide stop lever to allow slide to move forward and load a cartridge from the magazine into the chamber.

---

6. The loaded chamber indicator will be in the up position (See Page 12).

---

7. The striker status indicator will be protruding out of the rear of the slide (See Page 13) in the “cocked” position.

Caution: Never load cartridge by hand directly into the chamber.

Caution: The firearm is now ready to fire.

NOTE: An alternative method to load the cartridge into the chamber is to pull the slide completely to the rear and in one motion quickly release it, allowing the slide to slam forward unimpeded under its own force. (Do not hold the slide as it moves forward.

“Riding the slide” in this manner can cause cartridge to jam or misfeed.) The loaded chamber indicator will be in the up position (See Page 12-2).

Caution: Do not cover the ejection port with your hand when loading /unloading your firearm.



Figure 16-1

WARNING: Never touch the trigger when loading or unloading the firearm.

FIRING

If you have never fired a firearm before, follow the sequence of operations shown here without ammunition or with snap caps. Then load only one cartridge into the magazine for your first live ammunition firing.

1. **POINT FIREARM IN A SAFE DIRECTION WHILE KEEPING YOUR FINGER OFF OF THE TRIGGER.**

2. Load cartridge into chamber from magazine.

3. Grasp grip of firearm firmly. (A loose grip may cause the firearm to malfunction.) The pressure from the hand will deactivate grip safety located at top of rear grip area. **CAUTION: THE FIREARM IS NOW READY TO FIRE. BE PREPARED FOR NOISE AND RECOIL WHEN FIREARM FIRES.**

4. Aim firearm at target by aligning sights.

5. Now lightly place finger on trigger, and slowly squeeze trigger to fire the firearm. Spent cartridge is expelled up and to the right.

6. Pistol will automatically be ready to fire again after each shot until all cartridges loaded in magazine have been fired.

7. When last cartridge has been fired, slide will lock open and remain to rear.

This is an auto loading firearm. It is immediately loaded and ready to fire again after each shot until all cartridges loaded in magazine have been fired. Some XD-M Elite pistols are available with a magazine disconnect. These pistols will **NOT** fire when the magazine is removed.

WARNING: Always wear eye & ear protection when using any firearm.

WARNING: Loading by manually inserting a round in the chamber is improper and may cause accidental discharge and possible damage to the extractor . Always load the firearm using the magazine . When loading the firearm, always point the muzzle in a safe direction

⚠ **POINT FIREARM IN A SAFE DIRECTION AT ALL TIMES.**

⚠ **ALWAYS REMOVE YOUR FINGER FROM THE TRIGGER AND FROM THE TRIGGER GUARD WHEN REMOVING A MAGAZINE. FAILURE TO DO SO COULD RESULT IN AN UNINTENDED DISCHARGE!**

⚠ **NEVER REMOVE THE MAGAZINE WITH YOUR FINGER ON OR NEAR THE TRIGGER!**

UNLOADING / CLEANING

If slide is already in “locked back” position: (Figure 18)

1. **POINT FIREARM IN SAFE DIRECTION WHILE KEEPING YOUR FINGER OFF OF THE TRIGGER.**

---

2. Press magazine release button to remove magazine.

---

3. From above and rear, carefully inspect chamber to make sure it is empty.

When magazine has been removed and when chamber is empty, a firearm lock can be installed. Pistol can now be safely stored in a secure place.

Caution: Do not cover the ejection port with your hand when loading/unloading your firearm.



Figure 18-1

UNLOADING / CLEARING

If slide is forward:

1. **POINT FIREARM IN SAFE DIRECTION WHILE KEEPING YOUR FINGER OFF OF THE TRIGGER.**

2. Press magazine release button to remove magazine.

3. Fully depress the grip safety and pull slide fully to rear to eject any cartridge remaining in chamber. **NOTE: GRIP SAFETY MUST BE DEACTIVATED TO ALLOW THE SLIDE TO BE PULLED TO ITS REARWARD (OPEN) POSITION.**

4. While holding slide in rearward (open) position, carefully inspect chamber making sure it is empty (Figure 19).

When magazine has been removed and when chamber is empty, a firearm lock can be installed. Pistol can now be safely stored in a secure place.



Figure 19-1

⚠ PISTOL IS NOT EMPTY OR UNLOADED UNTIL THE MAGAZINE IS REMOVED AND CHAMBER IS EMPTY. NEVER TOUCH THE TRIGGER WHEN LOADING OR UNLOADING THE FIREARM.

POINT OF AIM

POINT OF IMPACT

Shooters may use a “point of aim” sight picture at 25 yards (Figure 54-1). This means that, at 25 yards, the bullet should impact the target at the point visible at the top of the front sight. Springfield, Inc. firearms are regulated to shoot point of aim, point of impact. Changing brand or type of ammunition may alter point of impact as well as shooter's technique.

Caution: Use only clean, dry, original, high-quality, commercially manufactured ammunition.



Figure 54-1

MALFUNCTION WARNING!

If cartridge hangs up, jams or binds when being chambered from magazine into chamber, do not attempt to force it into the chamber by pushing or striking slide.

DO NOT COVER THE EJECTION PORT WITH YOUR HANDS WHEN LOADING/UNLOADING YOUR FIREARM.

1. What to do: • **Point firearm in a safe direction while keeping your finger off of the trigger.** • Remove magazine. • Pull back on slide and allow cartridge to fall from firearm. • Do not cover the ejection port with your hands when loading / unloading your firearm. • If cartridge does not fall free, pull slide back and lock it back with slide stop. • Carefully dislodge cartridge. • If cartridge cannot be removed, lock slide back, carefully store your firearm and magazines and take it to a pistolsmith. (USE SUPPLIED CABLE LOCK) (Figure 20).

2. Most failures to feed or chamber a cartridge are the result of a damaged magazine, improper firearm handling or defective ammunition.

3. Whatever the cause, a jammed cartridge can be a dangerous situation.

If you have any questions concerning information in this manual, call Springfield's Consumer Safety Department at (309) 944-5631 for assistance.

Store key separately away from lock and out of reach of children. Springfield Armory® firearm boxes are also designed for an exterior lock.



Figure 20-1

WARNING: Always have firearm pointed in a safe direction. Failure to obey safety information may result in injury to you or others.

WARNING: Always wear eye & ear protection when using any firearm.

TO ELIMINATE MALFUNCTIONS

- First try changing type/brand of ammunition and/or magazine.
- If changing to another type/brand of ammunition and/or magazine does not at once result in smooth feeding of cartridges from magazine to chamber, the following steps should be taken:
- Make certain chamber and magazine are unloaded. Magazine should be removed first. Check chamber to be sure it and magazine well are clear of cartridges.
- Thoroughly clean magazine, paying particular attention to removing accumulated residue.
- Thoroughly clean breech mechanism of firearm. Use a bristle brush and solvent to remove residue and fouling from breech face, extractor, chamber and feed ramp.
- Check that magazine spring tension is adequate; the spring should hold the follower tightly against the lips of the magazine.
- Check that magazine lips are free of nicks and burrs and are not deformed.
- Remove excess oil and solvent from all cleaned components, load magazine and try firearm again.

WARNING: An obstructed, cracked, or damaged barrel should never be used and the firearm should be returned to Springfield for inspection.

FIELD STRIP

NOTE: FIELD STRIPPING PROCEDURES ON THE XD-M® ARE THE SAME REGARDLESS OF CALIBER.

Before performing any cleaning or maintenance, make sure the firearm is completely unloaded (this includes the magazine and chamber). Wear eye protection.

1. **POINT GUN IN SAFE DIRECTION WHILE KEEPING FINGER OFF THE TRIGGER.**
2. Remove magazine and unload firearm.
3. Draw back the slide to the rear stop position and lock it open, pushing up the slide stop lever (Figure 24-1).
4. Visually inspect the chamber to confirm the firearm is unloaded.
5. Rotate the disassembly lever clockwise to a vertical 12 o'clock position (Figure 24-2).
6. Firmly grip slide and pull to the rear to release the slide stop lever (Figure 25-1). Maintain firm grip on slide and allow the slide to slowly move forward until the spring tension is released. Caution: Remember slide is under spring tension, maintain control.
7. Move the complete slide assembly forward and off the frame (Figure 25-2).
8. Remove the recoil system from the slide (5.25" Figure 26-1)(4.5" & 3.8" Figure 26-2). **Caution: The 5.25" is a Non-Captive Recoil Spring System. Spring is under tension. Maintain control.**
9. Remove the barrel from the slide (Figure 26-3).

The firearm is now fully field stripped and ready for cleaning.



Figure 24-1



Figure 24-2



Figure 25-1

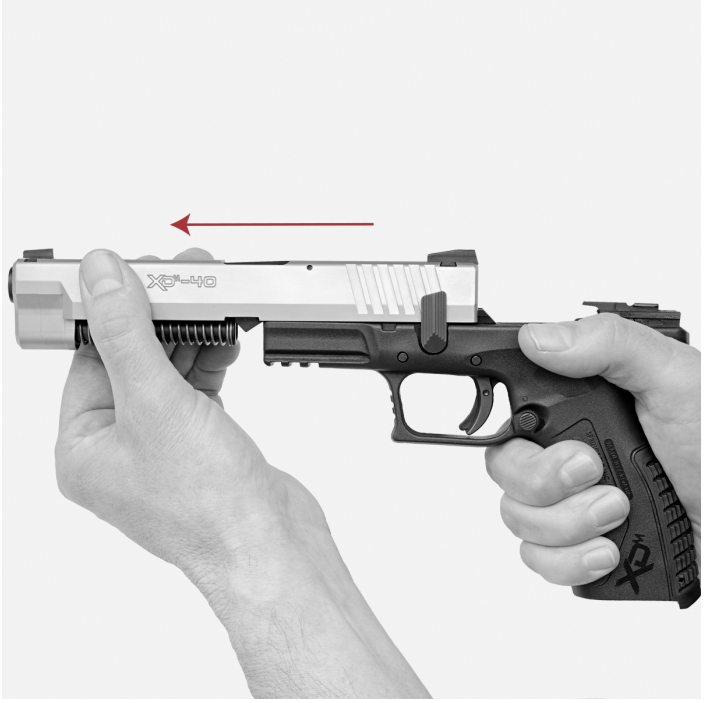

Figure 25-2



Figure 26-1



Figure 26-2



Figure 26-3

WARNING: If you disassemble your Springfield Armory® firearm, do so properly. Improper disassembly and/or assembly will create unsafe conditions that could result in injury or death, or a firearm that simply will not work. Don't take chances. Do not attempt to disassemble this or any other firearm until you have received training and instructions from a competent gunsmith.

WARNING: Further dismantling is not necessary and should only be done by Springfield, Inc. or a qualified gunsmith.

WARNING: Always wear eye & ear protection when using any firearm.

MAGWELL REMOVAL

MAKE SURE FIREARM IS UNLOADED.

TOOLS REQUIRED

- Hammer / Mallet
- 3/32'' Punch
- Padded Surface (Folded Towel / Mat, Etc.)

1. Lay pistol on its side on padded surface (left or right orientation is ok).
2. Using hammer/mallet and 3/32" punch, lightly tap out roll pin that secures backstrap and magwell, located at bottom / backside of grip (be sure **NOT** to angle punch when driving out) (Figure 28-1).

3. Once roll pin has been removed, the magwell and backstrap can now be removed. **NOTE: The front of the magwell has an internal lip that hinges on the front strap serrations of the frame & a vertical pin that protrudes through the backstrap.**

4. Gently wiggle magwell while pulling directly down from frame until magwell & backstrap release from frame. Now the magwell & pin can be removed from backstrap (Figure 28-2 & 28-3).



Figure 28-1



Figure 28-2



Figure 28-3

MAGAZINE DISASSEMBLY

NOTE: DISASSEMBLY AND CLEANING PROCEDURES ARE THE SAME FOR ALL XD-M® .40S&W, .45ACP AND COMPACT MAGAZINES.

Disassembling and cleaning magazines every 3-4 months is normally sufficient, unless the magazines have been exposed to dirt or other adverse conditions or inspection indicates a need for cleaning. Disassembly of the XD-M® magazine is accomplished by depressing the magazine locking plate and sliding the base plate forward. (Parts List).

NOTE: MAKE NOTE OF MAGAZINE SPRING ORIENTATION.

ALWAYS WEAR PROTECTIVE SAFETY GLASSES WHEN DISASSEMBLING OR REASSEMBLING ANY MAGAZINE.

DISASSEMBLY AND CLEANING PROCEDURES FOR THE XD-M® 9MM MAGAZINES.

Disassembly of the XD-M® magazine is accomplished by depressing the exposed portion of the magazine spring that is visible through the bottom surface of the magazine base. While depressing the spring carefully slide the magazine base forward keeping in mind

that there is considerable spring pressure bearing on the magazine base. Control this spring as the base is removed. The magazine can now be fully disassembled. Reassembly: Orient and reassemble the components as illustrated in Figure 33. Depress the magazine spring and slide the magazine base home until the magazine spring "snaps" into place in the base securing the magazine base.

ALWAYS WEAR PROTECTIVE SAFETY GLASSES WHEN DISASSEMBLING OR REASSEMBLING ANY MAGAZINE.

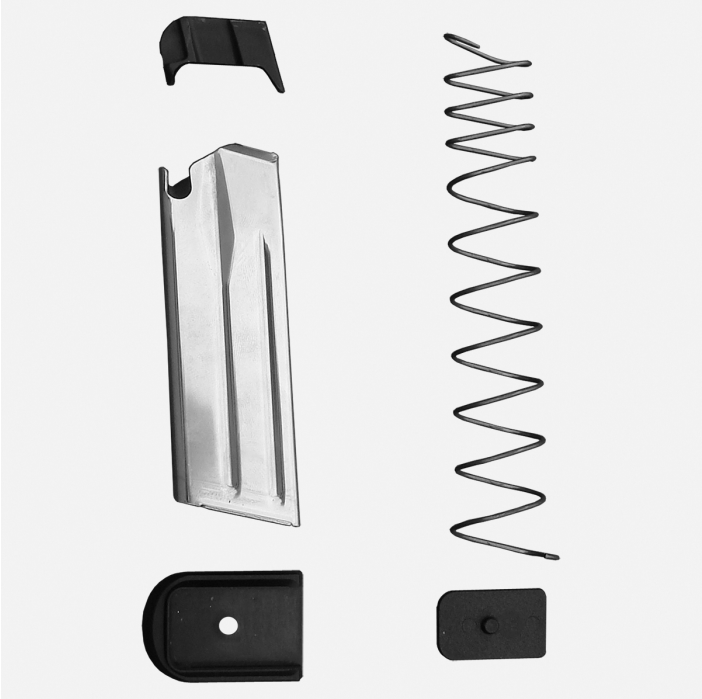

Figure 32-1



Figure 33-1

WARNING: The magazine spring, follower, and inner floor plate are under spring tension, and can cause eye injury if not controlled during removal. Wear protective safety glasses to reduce the risk of eye injuries. Be sure to maintain downward pressure on the magazine spring, with your thumb, while disassembling.

REASSEMBLY

NOTE: REASSEMBLY PROCEDURES ON THE XD-M® ARE THE SAME REGARDLESS OF CALIBER.

Caution: Never allow live ammunition in the area while you are maintaining your firearms.

1. Install barrel into slide (Figure 30-1) insuring that the top of the chamber of the barrel is flush with the top of the slide (Figure 30-2).

---

2. Reinstall the recoil system insuring it is properly aligned (5.25" & 4.5" - Figure 30-3)(3.8" - Figure 30-4). **NOTE: IMPROPERLY ALIGNED RECOIL SYSTEM OR BARREL POSITION WILL CAUSE REASSEMBLY PROBLEMS. NEVER FORCE SLIDE ASSEMBLY ONTO FRAME.**

---

3. Install the slide assembly onto the frame (Figure 30-5). If interference is encountered, remove the slide assembly and make sure the barrel is properly seated and the recoil system is properly aligned. **NEVER FORCE SLIDE ASSEMBLY ONTO FRAME! Doing so could cause damage to your firearm.**

---

4. (Figure 31) Move the slide to its most rearward position (1) (at this point spring resistance will be encountered) and move/push the slide stop up (2), locking the slide to the rear.

---

5. Rotate the disassembly lever counter-clockwise to the normal (locked) position (3).

---

6. Lower the slide.

---

7. Reassembly is now complete.





Figure 30-1

Figure 30-2



Figure 30-3



Figure 30-4

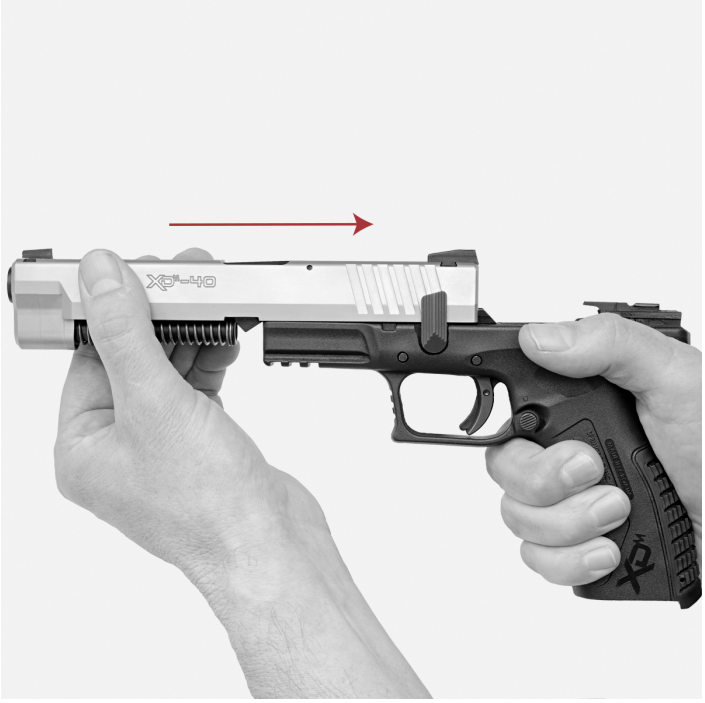

Figure 30-5



Figure 31-1

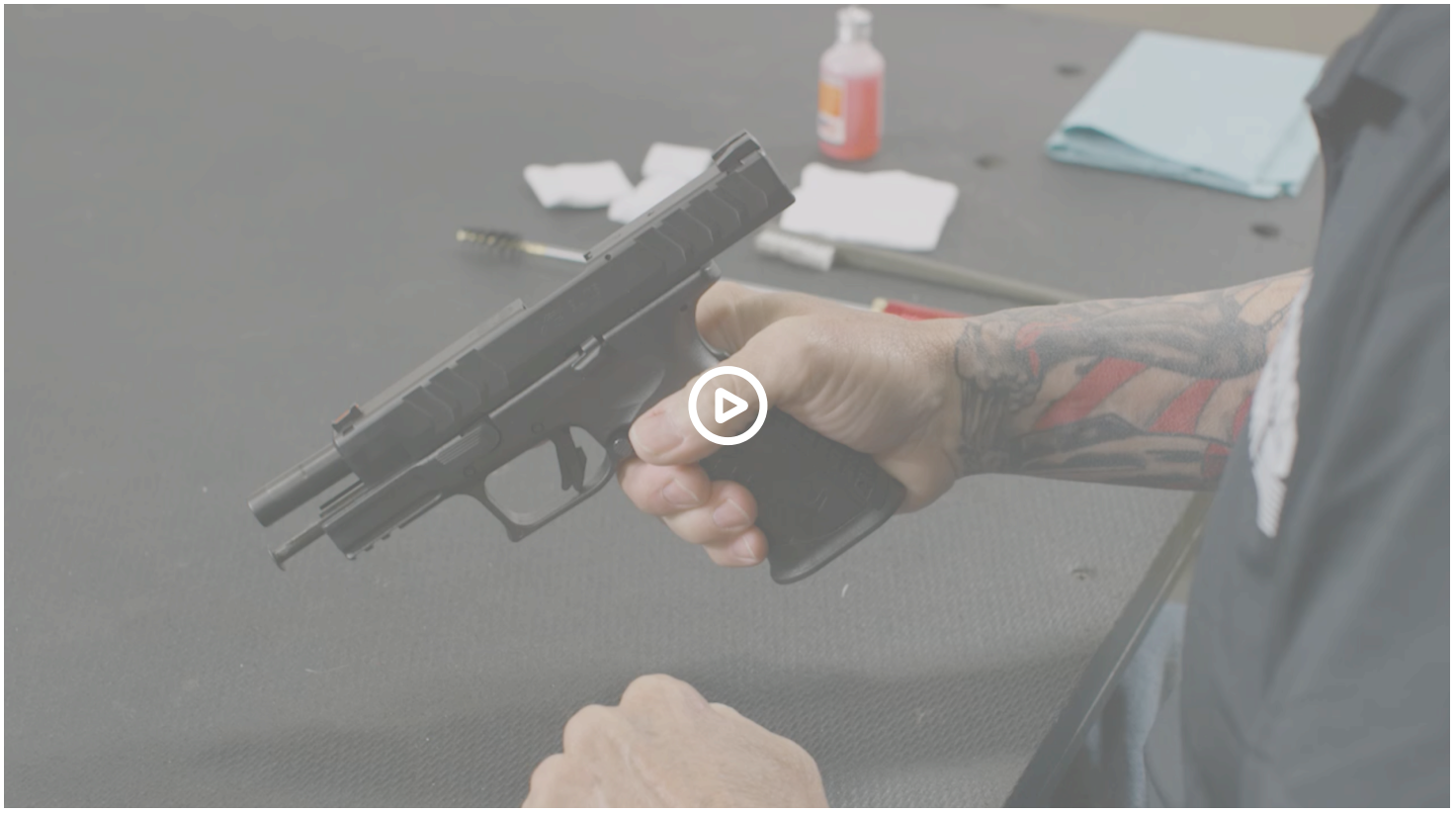

CARE & CLEANING

KEEP YOUR GUN CLEAN AT ALL TIMES

BASIC MATERIALS NEEDED:

- Cleaning rod of proper size with bristle bore brushes (fiber or brass) and tip into which cleaning patch can be inserted.
- Cloth patches
- Powder solvent
- Lubricating oil
- Small lint-free cloths for wiping and oiling
- Bristle brush for scrubbing dirt off breech face, extractor, magazine lips, follower, etc.

Use proper size bore brushes and patches - if they are too small they won't do the job, and if they are too large they will bind inside bore.

When possible, insert cleaning rod from chamber end of barrel and push rod all the way through so it emerges from muzzle.

Do not "reverse" rod direction when patch or brush is in barrel, it might bind.

Do not use patches dripping with solvent or oil. Wet patches or brushes, then squeeze out excess before using. When using bore brushes or a larger bristle brush on breech face, breech areas, magazines, etc., work carefully to prevent damaging components.

NOTE: If lower parts of receiver and its mechanism are especially dirty, soak in appropriate solvent, flush clean with clean solvent. Make certain that all foreign matter is removed after cleaning. Lightly oil after cleaning.

Only a very small amount of oil is needed to adequately lubricate moving parts and prevent rust. Accumulation of oil tends to attract dust and dirt which interferes with the safe and reliable functioning of firearm. DO NOT APPLY EXCESS LUBRICATING OIL. DO NOT APPLY OIL OR GREASE TO STRIKER.

CLEANING FIREARM

1. Point firearm in safe direction.
2. Remove magazine and empty chamber.
3. Separate cartridges from firearm before cleaning operation.
4. Open slide and visually check that chamber and magazine well are free of cartridges.
5. Disassemble firearm as described in the DISASSEMBLY section.
6. Using cleaning rod, run solvent-wetted patch through barrel several times.
7. Attach solvent-wetted bristle brush to rod and run back and forth full length of barrel as needed until clean of residue.
8. Clean barrel with dry patches and examine it. If necessary, repeat barrel scrubbing. Barrel fouling can contribute to reduced accuracy, and residue accumulation in the chamber can interfere with proper feeding of cartridges from magazine.
9. Using powder solvent on a clean patch, remove powder residue from all components of mechanism. If residue cannot be removed by wiping with patch, use solvent-wetted bristle brush.
10. Next, wipe scrubbed areas with solvent-wetted patch.
11. After cleaning, run dry patch through barrel, then follow with lightly oiled patch.
12. Wipe all surfaces clean with cloth, then wipe all surfaces with lightly oiled patch (or cloth).
13. Reassemble firearm. Remember, an improperly assembled firearm is dangerous and should not be fired. Always consult a qualified pistolsmith if you experience any

difficulty or have any questions concerning assembly procedure.

---

14. If firearm is to be stored for an extended period, final oil applications can be heavier so there will be less tendency for it to evaporate.

---

15. Keep your firearm clean at all times.



WARNING: Always wear eye & ear protection when using any firearm.



WARNING: Wear eye protection when using solvent. Thoroughly wash your hands to remove powder and solvents after cleaning your firearm.

CABLE LOCK

Step 1 - Point gun in safe direction while keeping your finger off the trigger.

Step 2 - Press magazine release and remove magazine.

Step 3 - Pull slide fully to the rear and lock open.

Step 4 - Check to see that no cartridge is in the chamber.

Step 5 - Insert cable through the ejection port and out magazine well.

Step 6 - Lock cable into cable lock.

Step 7 - Grasp slide and ease forward.

CAUTION: GUNS SHOULD ALWAYS BE LOCKED AND STORED IN COMPLETE COMPLIANCE WITH ALL APPLICABLE LAWS AND REGULATIONS.

This cable lock is supplied as an aid to your security measures.

Store key separately away from lock and out of reach of children. Springfield Armory® firearm boxes are also designed for an exterior lock. (Not Included)



Figure 55-1