SPRINGFIELD ARMORY®

Hellcat® Manual

Operation & Safety Manual

IMPORTANT SAFETY INFORMATION INSIDE

Read this manual before handling this firearm. Keep this manual with your firearm and review it before each use.
Do not allow others to handle or fire your firearm until they have read this manual.
Transfer this manual with the firearm upon ownership change.
THIS MANUAL IS FOR HELLCAT® FIREARMS ONLY.

Be a responsible firearm owner. Use it safely, store it securely, and always transfer a firearm responsibly and legally.

READ & UNDERSTAND THIS MANUAL

ABOUT YOUR OWNER'S MANUAL

This is an auto loading firearm. It is immediately loaded and ready to fire again after each shot until all cartridges loaded in magazine have been fired. Some Hellcat pistols are available with a magazine disconnect. These pistols will **NOT** fire when the magazine is removed. To determine if your pistol has a magazine disconnect, observe the top of the slide at the loaded chamber indicator position. Pistols with the magazine disconnect feature will have this verbiage at the loaded chamber indicator location: "Loaded When Up".

This is an instruction booklet on how to operate this firearm with some basic safe handling rules. It does not attempt to provide information about using a firearm to defend yourself, how to hunt, or for competitive or target shooting. It is important to receive training from a competent firearms instructor prior to engaging in any of these activities. The National Rifle Association, your local or state authorities, or your firearm dealer may provide information regarding available instructors or training courses. If you have a license to carry concealed, never do so without prior instruction from a certified instructor. Using a firearm for self defense is a complex subject with dangers and risks for which you must be properly trained. Every safety rule has a reason behind it - read the rules carefully and understand why each is important for safety.

It is recommended that every person receive instructions from a competent firearms instructor before handling this or any other firearm.

Know and obey all firearms laws and regulations, which may vary from city to city and state to state. Do not give a firearm to someone who is not allowed to own a firearm or who may use it for a criminal purpose.

USED FIREARMS

If you purchased this firearm as a used firearm, have it inspected and tested by a competent pistolsmith before you use it. Firearms are sometimes altered and may require repair before they can be used safely.

STORE FIREARMS SAFELY IN THE HOME

Store firearms unloaded, locked and in a secure place. Obey firearm storage laws. Store firearms and ammunition separately. Because your children may be in other homes where

firearms are stored, you should show them what to do if they see or find a firearm by showing them theEddie Eagle video available from the NRA by calling (703) 267-1000.

OBEY ALL FIREARMS LAWS WHEN BUYING AND SELLING FIREARMS. NEVER BUY A FIREARM INTENDING TO TRANSFER IT TO SOMEONE WHO IS PROHIBITED FROM OWNING FIREARMS. NEVER EVER BE A "STRAW PURCHASER."

KNOW YOUR FIREARM

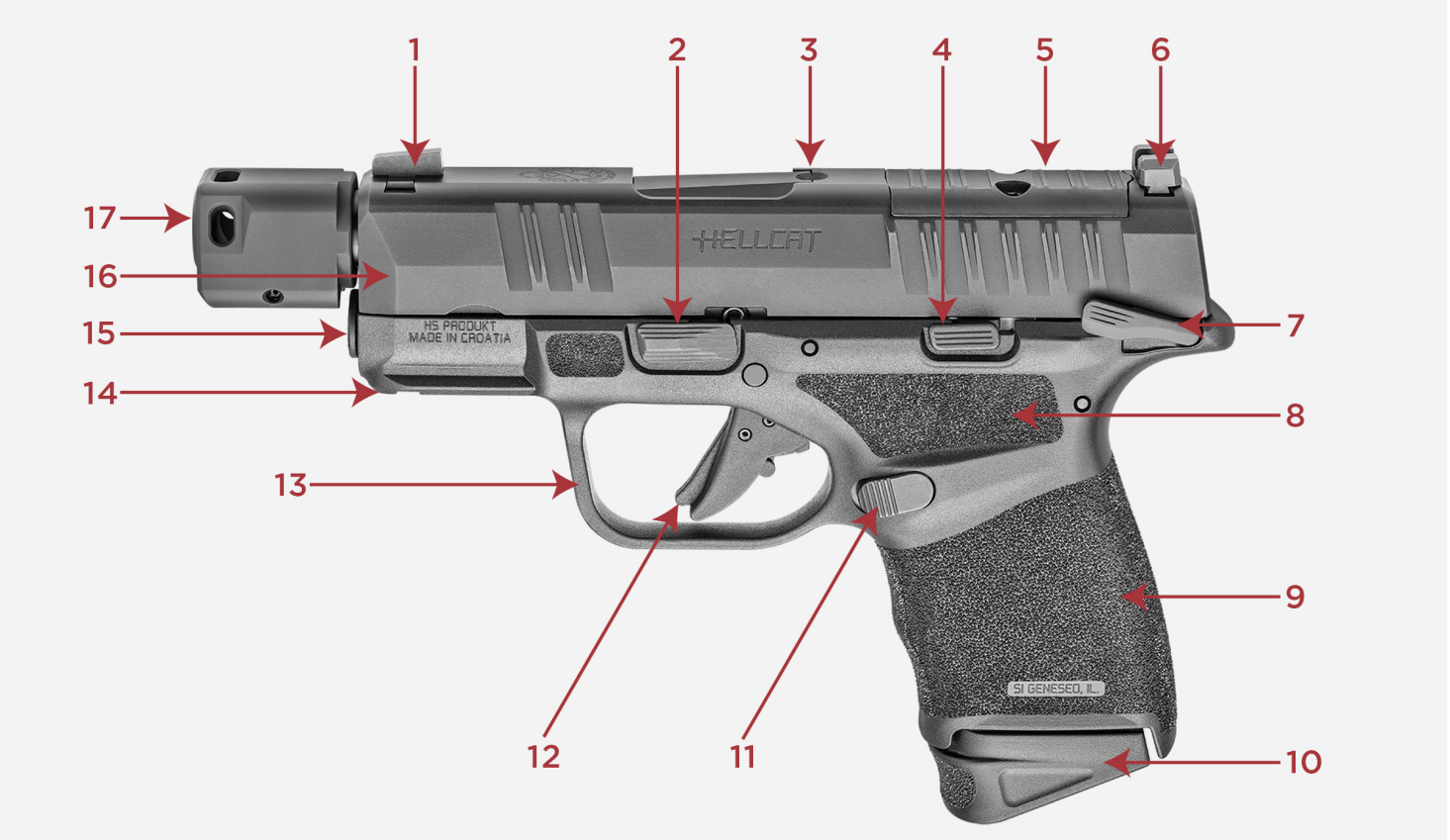

Hellcat - Know Your Firearm

1 Front Sight

2 Disassembly Lever

3 Loaded Chamber Indicator (Top of Slide)

4 Slide Stop Lever

5 OSP Cover Plate (OSP Models Only)

6 Rear Sight

7 Manual Thumb Safety (Optional)

8 Thumb Rest

9 Frame

10 Magazine

11 Magazine Release

12 Trigger w/ Safety

13 Trigger Guard

14 Accessory Rail

15 Dual Captive Recoil Spring w/ Full Length Guide Rod (Internal)

16 Slide

17 Self Indexing Compensator (RDP Models Only)

SAFETY RULES

READ AND UNDERSTAND THESE SAFETY RULES

BE A SAFE FIREARM OWNER.

ACCIDENT *(ak´ si dent)N. 1. An unintentional or unexpected happening that is undesirable or unfortunate, especially one resulting in injury, damage, harm or loss.*

Don't be the cause of an accident. A responsible firearm owner is safety minded and always handles firearms in a safe manner by following the basic rules of safe shooting and by using common sense in the handling of a firearm. Store firearms unloaded, locked, and in a secure place. Keep keys for locks separate from lock and in a secure place away from children. Keep firearms out of reach of children. You are responsible for children's safety.

BE A RESPONSIBLE FIREARM OWNER.

- Treat all firearms as if they are loaded at all times.

- Although many safety mechanisms are designed into your firearm, firearm safety still depends on you being a responsible firearms owner.

- Never point a firearm at any person or thing you do not intend to shoot. Treat every firearm as if it is loaded.
- Be sure you have positively identified your target.
- Always keep the muzzle pointed in a safe direction.
- Do not drop your firearm. Make sure you maintain control of your firearm at all times. If it falls, it may fire. If you do drop it, unload it and examine it to be sure it works correctly. Do not attempt to fire it again until you have completed this safety check.
- Never put your hand over the muzzle of the firearm.
- Keep your finger(s) off the trigger and out of the trigger guard until you are actually aiming at your target, and made the decision to fire.
- Under no circumstances should the owner of this firearm allow it to come into possession of or be handled by small children or a mentally handicapped individual. Do not cover the ejection port with your hands when loading/unloading your firearm.
- Never rely on a firearm's "safety features" to protect you from unsafe firearm handling. A safety is only a mechanical device, not a substitute for common sense.
- Keep your finger off the trigger until you are on target and have made the DECISION to fire.
- Be sure of your target and backstop before you shoot. Ask yourself what your bullet will hit if it misses or goes through the target.
- Before shooting, be sure the barrel is clear of obstructions, including excessive oil and grease.
- Do not let water, snow, mud or other materials enter the barrel.

- Do not pull a firearm toward you by the muzzle.
- Always hold your firearm so you control the direction of its muzzle in case you fall or stumble.
- ALWAYS KEEP THE MUZZLE POINTED IN A SAFE DIRECTION.
- If anything does get into the barrel, remove cartridges, and clean bore immediately before attempting to shoot. Obstructed barrels can burst and injure you and/or bystanders.
- Maintain possession of your firearm at all times when you are on the firing range or during target practice. DO NOT ALLOW OTHERS TO HANDLE YOUR FIREARM UNLESS THAT PERSON IS BEING INSTRUCTED OR TRAINED.
- Do not cover the ejection port with your hands when loading/unloading your firearm.
- **WARNING:** The HELLCAT® pistol, like all firearms, is a dangerous weapon if not handled properly.

BE A SAFE FIREARM OWNER!

- Always keep the muzzle pointed in a safe direction.
- Firearms and alcohol or drugs do not mix. Do not take them before or during shooting activities. Your vision, coordination and judgment could be impaired, making firearm handling unsafe.
- When taking medication, seek a doctor's advice to be sure you can operate and handle your firearm safely.
- Receive training from a competent firearms instructor before using any firearm.
- Before attempting to shoot, practice operations by using snap caps (dummy rounds). Become familiar with the safety features, trigger control, and handling of the firearm.

- Make sure you maintain control of your firearm at all times.
- Always keep and carry your firearm with an empty chamber until you intendto shoot, so your firearm cannot be fired unintentionally.
- Firearms should be unloaded when not in use. This means both the chamber and magazine are empty.
- When transferring a firearm by hand, always open the action and check to assure that it is unloaded prior to handing it over to someone.
- Never take anyone's word that a firearm is unloaded. When receiving a firearm, always open the action and check that it is unloaded.
- Do not try to change your firearm's trigger pull, because alterations of trigger pull usually affect sear engagement and might cause accidental firing.
- Never use a firearm that jams or fails to function properly. Should this occur, return to Springfield, Inc. for warranty/repair.
- If your shot sounds weak or underpowered, it could mean a bullet is in the chamber/bore. The firearm should be immediately unloaded and the chamber/bore checked for obstructions before re-firing.
- DO NOT "HORSEPLAY" with a firearm. Your firearm cannot think ...but you can. Firearm safety depends on you.
- **WARNING: There is no safe way to discharge a firearm in a home or apartment. Bullets will go through walls, floors, furniture, and appliances and still cause serious injury or death to persons in the house, next door, or outside. Accidental discharges indoors ALWAYS result in property damage or personal injury.**
- **WARNING:When you squeeze the trigger, you must expect the firearm to fire. You must take full responsibility for firing it. Your care can avoid accidental discharge and thereby avoid accidental injury and death.**

READ THESE RULES!

- Load firearm only when on range preparing to fire. Unload it before leaving range.
- Treat every firearm as if it is loaded ... all the time!
- Load and unload with the firearm muzzle pointed in a safe direction.
- Be certain firearm is unloaded before cleaning.
- Completely unload your firearm before storing, travelling, standing it against an object, laying it down, entering a house, car, truck, boat, RV/camper, building, or handing it to someone.
- Never leave a loaded firearm unattended.
- Tragedy may result if a child finds your firearm and plays with it. Keep every firearm secure. Children do not believe firearms can kill.
- Store firearms and ammunition separately. Both should be placed beyond children's reach.
- Obey all laws regarding the storage and security of firearms in the home.
- Know and obey the laws regarding the transportation and carrying of firearms.
- Never carry any firearm, loaded or unloaded, in your pocket, purse or tucked in your belt or waistband. Use a firearm case or a proper holster.
- Old or reloaded ammunition may cause damage to the firearm and/or injure you or others. Use only clean, dry, original, high-quality, commercially manufactured ammunition. Using reloaded ammunition may void the warranty.

- ALWAYS REMEMBER, THE PISTOL IS NOT UNLOADED UNTIL THE MAGAZINE IS REMOVED AND THE CHAMBER IS EMPTY.

- Do not cover the ejection port with your hands when loading/unloading your firearm.

TREAT EVERY FIREARM AS IF IT IS LOADED ... ALL THE TIME!

- Many ammunition identifications sound similar. Make sure you use the right caliber/size ammunition in your firearm.

- If firearm fails to fire when the trigger is pulled, keep it pointed at the target for at least 30 seconds. Remove the magazine before opening the action. Remove the cartridge from the chamber. Sometimes slow primer ignition will cause a “hang fire” and the cartridge will go off after a short pause.

- When group firing, always appoint someone to maintain safety control. Obey his/her commands immediately and completely.

- While shooter is loading, firing, and unloading, spectators need to remain behind the shooter.

- Always wear protective glasses when shooting.

- Always wear hearing protection when shooting.

- Never shoot at hard flat surfaces or water; bullets will ricochet unpredictably.

- Do not alter or modify your firearm.

- Have your firearm serviced regularly by a qualified pistolsmith.

- Discharging firearms in poorly ventilated areas, cleaning firearms, or handling ammunition may result in exposure to lead and other substances known to cause birth defects, reproductive harm, cancer and other serious physical injury. Have adequate

ventilation at all times. Wash hands thoroughly after firing your firearm, after cleaning your firearm, or whenever you have handled ammunition.

- Always use quality ammunition.
- ALWAYS KEEP THE MUZZLE POINTED IN A SAFE DIRECTION.
- Do not cover the ejection port with your hands when loading/unloading your firearm.

HANDLING

We want you to be a safe, satisfied firearm owner.

Before attempting to load this firearm with live ammunition, follow the sequence of operations shown here without ammunition or with snap caps.

By practicing operations with snap caps, you will become familiar with:

- Safety features
- Trigger control (snap caps)
- Handling of your firearm

As a result, you will be a safer, more confident user when aiming at your first target.

NOTE: Extensive dry firing can accelerate component wear/stress. Use snap caps if dry firing on a regular basis.

Write, call or email us concerning any items you do not understand and/or which might relate to your safety and the safe operations of any of our products.

Springfield, Inc.

Consumer Safety Department

650 Weber Dr.

Geneseo, IL 61254

(309) 944-5631

1-800-680-6866

cs@springfield-armory.com

WARNING: Safety devices, like all things mechanical, can fail. Safety devices are not a substitute for safe firearm handling. Always follow the rules for safe firearm handling.

SAFETY DEVICES

Striker Block Safety - The internal Striker Block Safety is designed to prevent the firearm from firing unless the trigger is depressed.

Trigger Safety - The trigger safety blocks the trigger from moving backward. A lever incorporated into the trigger (See Figure 12-1) deactivates the safety when completely depressed while pulling the trigger. The trigger can only be pulled if depressed together with the trigger safety lever (See Figure 12-2).



Figure 12-1



Figure 12-2

WARNING: Safety devices, like all things mechanical, can fail. Safety devices are not a substitute for safe firearm handling. Always follow the rules for safe firearm handling.

Manual Safety - Some Hellcat models are equipped with an ambidextrous manually operated thumb safety. To activate the safety lift the lever upwards (Figure 13-1). The safety can only be activated when the pistol is charged (cocked). To fire press downward on the safety lever to disengage (Figure 13-2).The pistol is now ready to fire!

When field stripping the Hellcat with manual safety the safety must be lowered to the off position.



Figure 13-1



Figure 13-2

Magazine Disconnect - Some Hellcat pistols are available with a magazine disconnect. These pistols will **NOT** fire when the magazine is removed.

To determine if your pistol has a magazine disconnect, observe the top of the slide at the loaded chamber indicator position. Pistols with the magazine disconnect feature will have this verbiage at the loaded chamber indicator location: "Loaded When Up" (Figure 14-3).

To Determine if your pistol has a magazine disconnect, observe the top of the loaded chamber indicator position. Pistols with the magazine disconnect feature will have this verbiage at the loaded chamber indicator location: "Loaded When Up" (Figure 14-3).

still unsure of which model you have, please contact customer service: 800-680-6866.



Figure 14-3

⚠ **ALWAYS REMOVE YOUR FINGER FROM THE TRIGGER AND FROM THE TRIGGER GUARD WHEN REMOVING A MAGAZINE. FAILURE TO DO SO COULD RESULT IN AN UNINTENDED DISCHARGE!**

⚠ **NEVER REMOVE THE MAGAZINE WITH YOUR FINGER ON OR NEAR THE TRIGGER!**

LOADED CHAMBER INDICATOR

Loaded Chamber Indicator - Your HELLCAT® firearm has a loaded chamber indicator (Figure 14-1). The indicator allows you to observe whether a cartridge is in the chamber. **When a cartridge is visible in the chamber, the firearm is loaded and ready to fire** (Figure 14-2).

Hellcat pistols are configured with one of two types of loaded chamber indicator's. Hellcats with the magazine disconnect have a mechanical loaded chamber indicator (Figure 14-3).

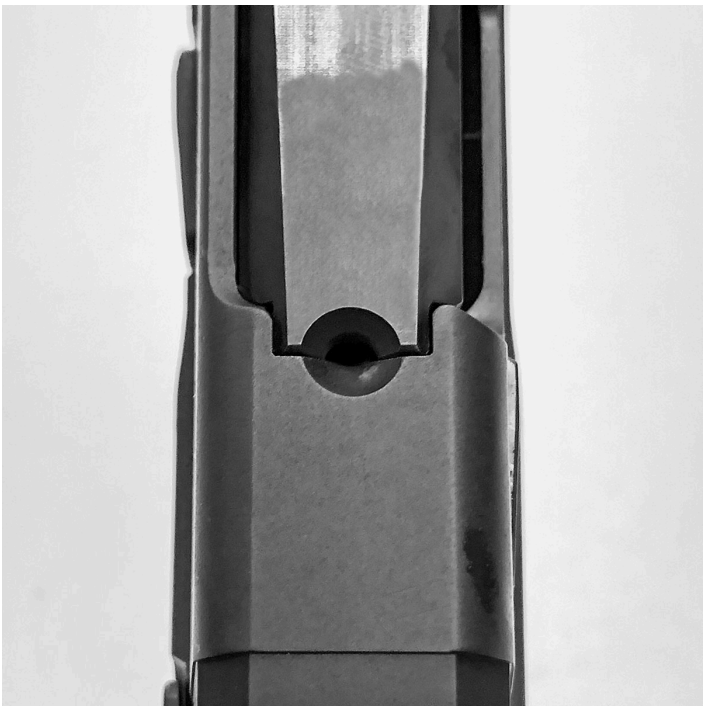

Figure 14-1

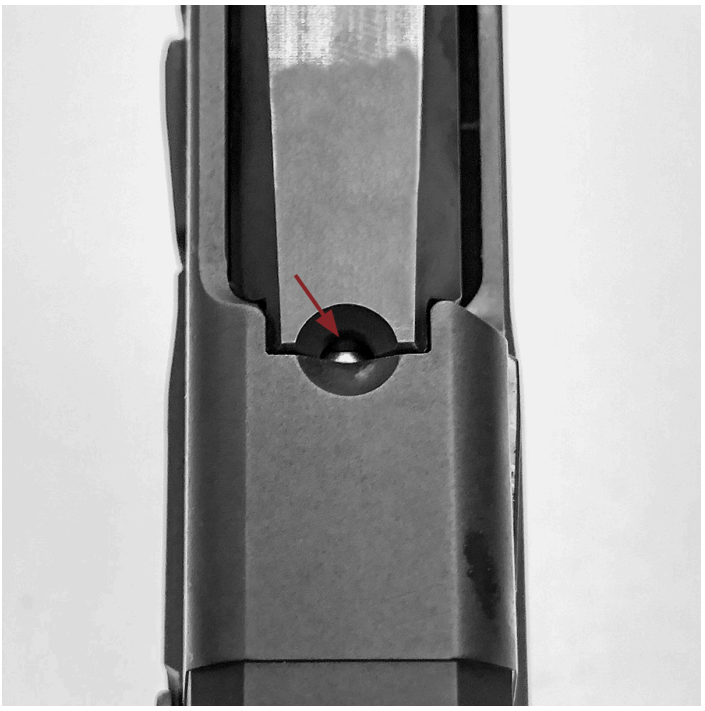

Figure 14-2

WARNING: Even though the chamber is empty there may be cartridges in the magazine. The firearm is not completely unloaded until the magazine is removed and the chamber is empty.

WARNING: Never trust a safety. Always assume the firearm is loaded.



Figure 14-3 (Magazine Disconnect)

HELLCAT® SLIDE PARTS LIST

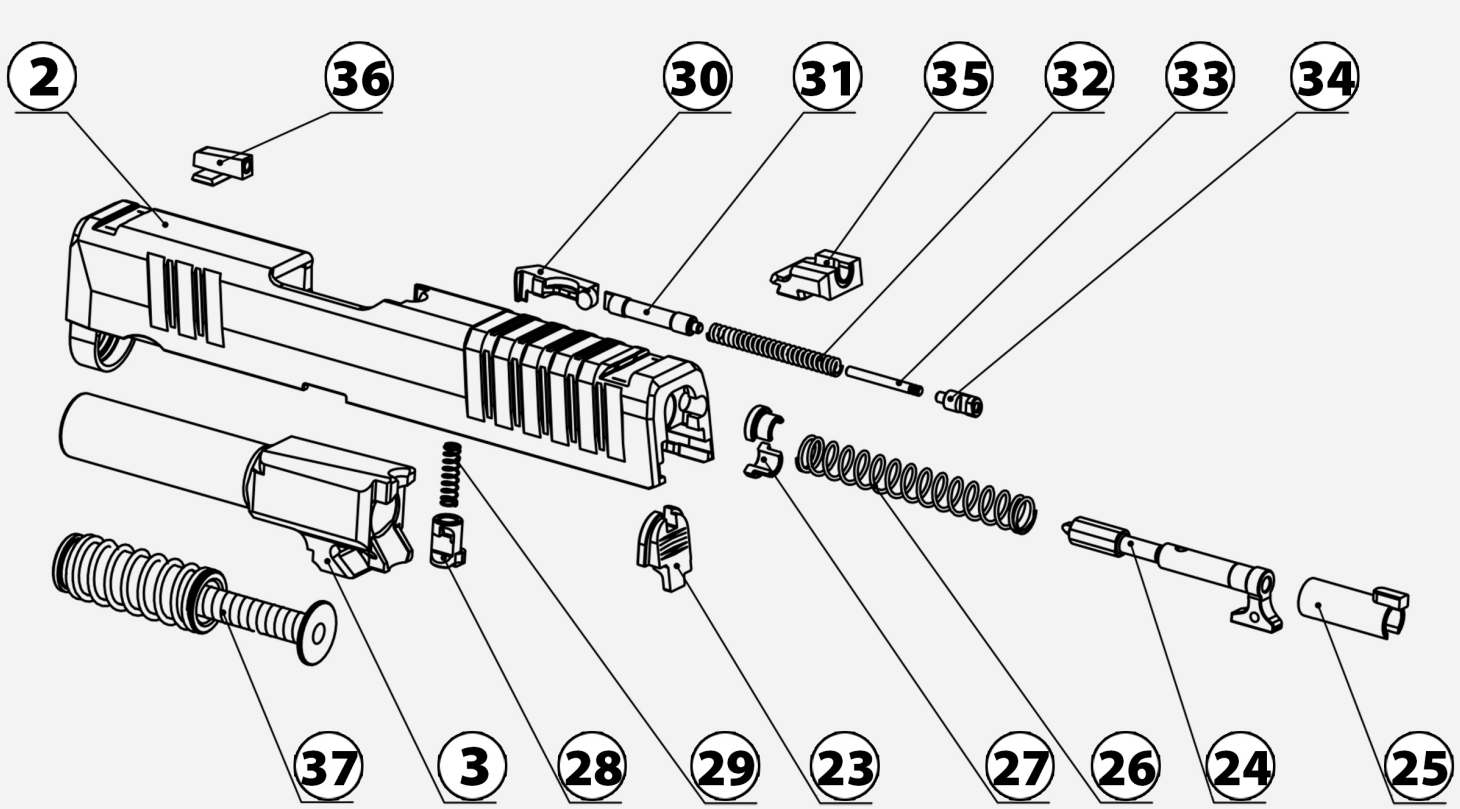

Hellcat Slide Parts Diagram

2 Slide

3 Barrel

23 Striker Locking Plate

24 Striker

25 Striker Guide

26 Striker Spring

27 Striker Spring Retainer

28 Striker Pin Safety

29 Striker Safety Spring

30 Extractor

31 Extractor Pin

32 Extractor Spring

33 Extractor Spring Pin

34 Extractor Spring Plate

35 Rear Sight

36 Front Sight

37 Recoil Spring Assembly

HELLCAT® OSP™ SLIDE PARTS LIST

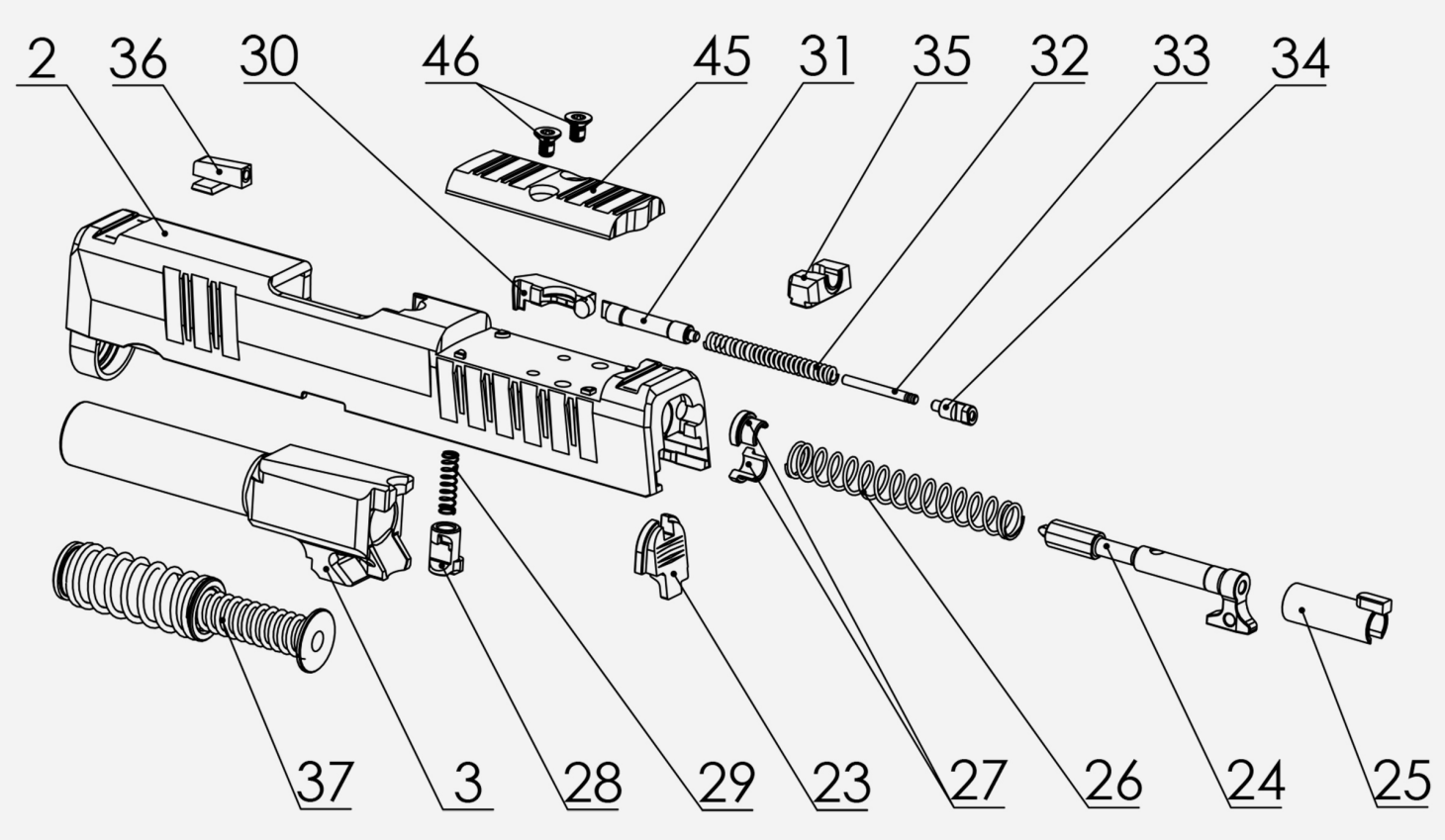

Hellcat OSP Slide Parts List

2 OSP SLide

3 Barrel

23 Striker Locking Plate

24 Striker

25 Striker Guide

26 Striker SPring

27 Striker Spring Retainer

28 Striker Pin Safety

29 Striker Safety Spring

30 Extractor

31 Extractor Pin

32 Extractor Spring

33 Extractor Spring Pin

34 Extractor Spring Plate

35 OSP Rear Sight

36 Front Sight

37 Recoil Spring Assembly

45 OSP Plate

46 OSP Screw

HELLCAT® OSP™ SLIDE WITH THREADED BARREL PARTS LIST

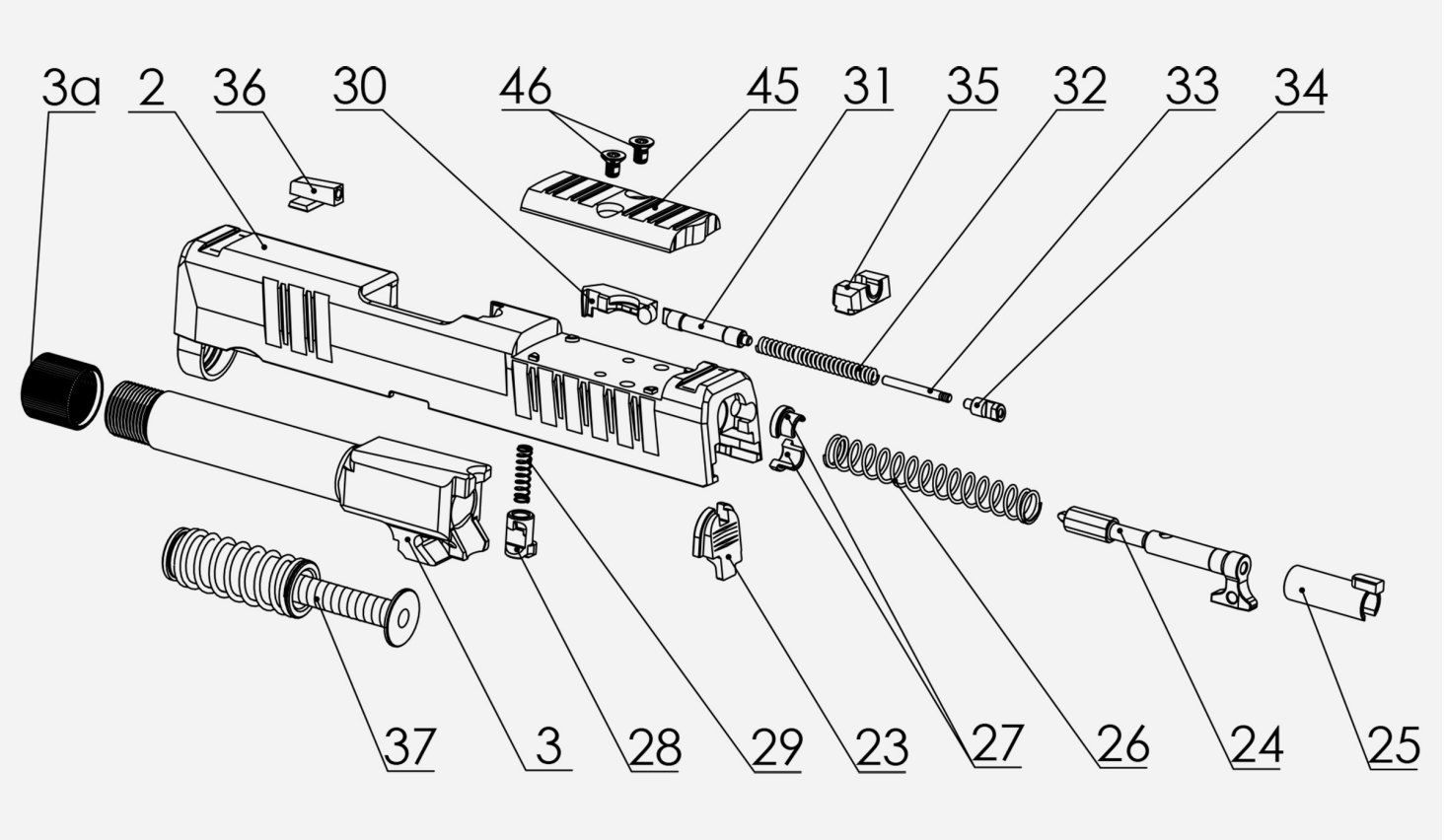

Hellcat OSP Slide w/ Threaded Barrel Parts List

2 OSP Slide

3 Threaded Barrel

3a Threaded Barrel Protector

23 Striker Locking Plate

24 Striker

25 Striker Guide

26 Striker Spring

27 Striker Spring Retainer

28 Striker Pin Safety

29 Striker Safety Spring

30 Extractor

31 Extractor Pin

32 Extractor Spring

33 Extractor Spring Pin

34 Extractor Spring Plate

35 OSP Rear Sight

36 Front Sight

37 Recoil Spring Assembly

45 OSP PLate

46 OSP Screws

HELLCAT® FRAME PARTS LIST

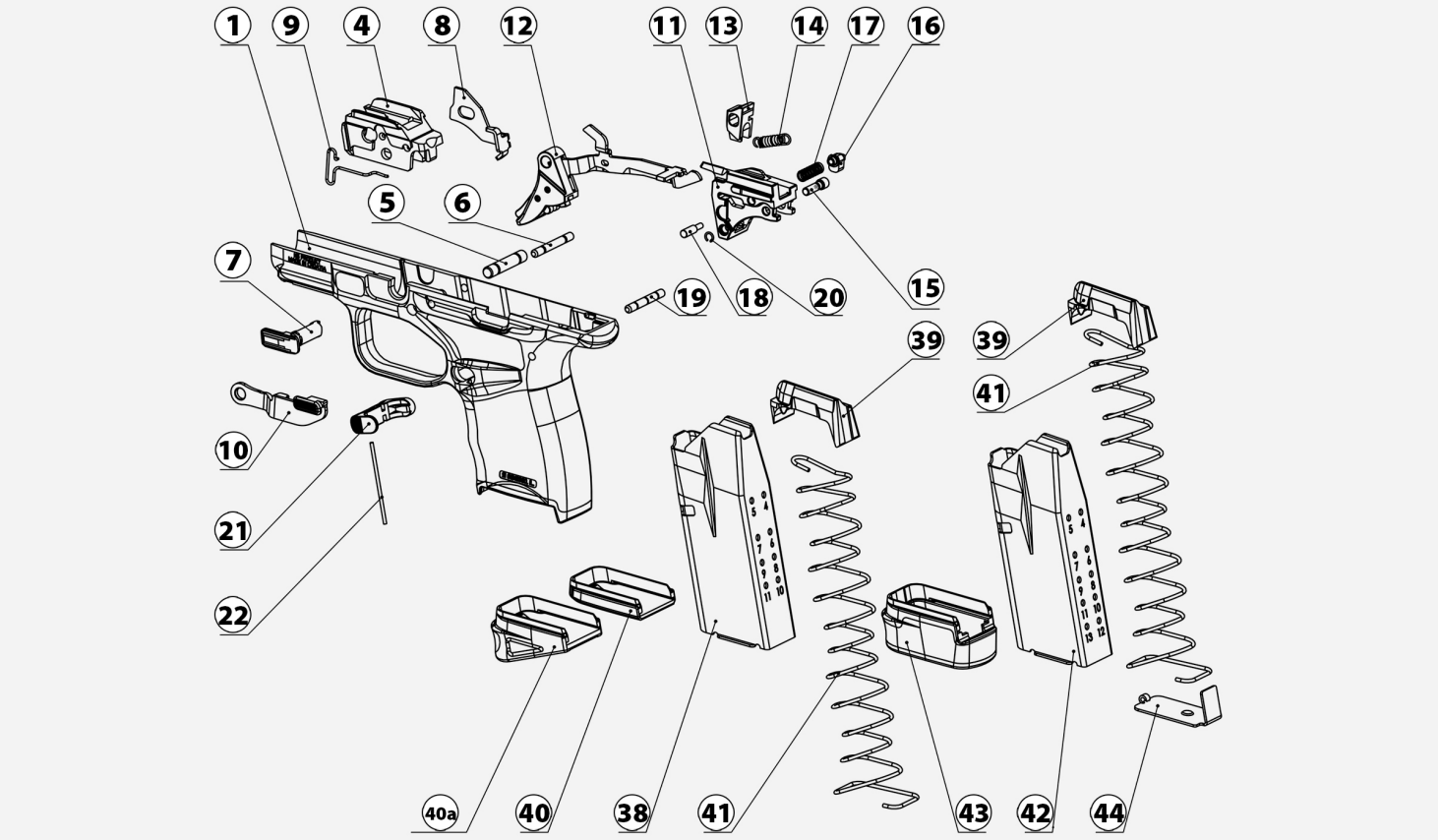

Hellcat Frame Parts List

1 Frame

4 Locking Block

5 Trigger Pin

6 Locking Block Pin

7 Disassembly Lever

8 Magazine Blocking Lever

9 Slide Stop Lever Spring

10 Slide Stop Lever

11 Sear Housing

12 Trigger Assembly

13 Sear

14 Sear Spring

15 Sear Spring Pin

16 Disconnector

17 Disconnector Spring

18 Disconnector Pin

19 Sear Housing Pin

20 Sear Housing Pin Safety

21 Magazine Catch

22 Magazine Catch Spring

38 Magazine Body - 11 Round

39 Magazine Follower

40 Magazine Base - 11 Round

40a Magazine Base Extended

41 Magazine Spring

42 Magazine Body 13-Round

43 Magazine Base 13-Round

44 Magazine Floor Plate

HELLCAT® FRAME WITH MANUAL SAFETY PARTS LIST

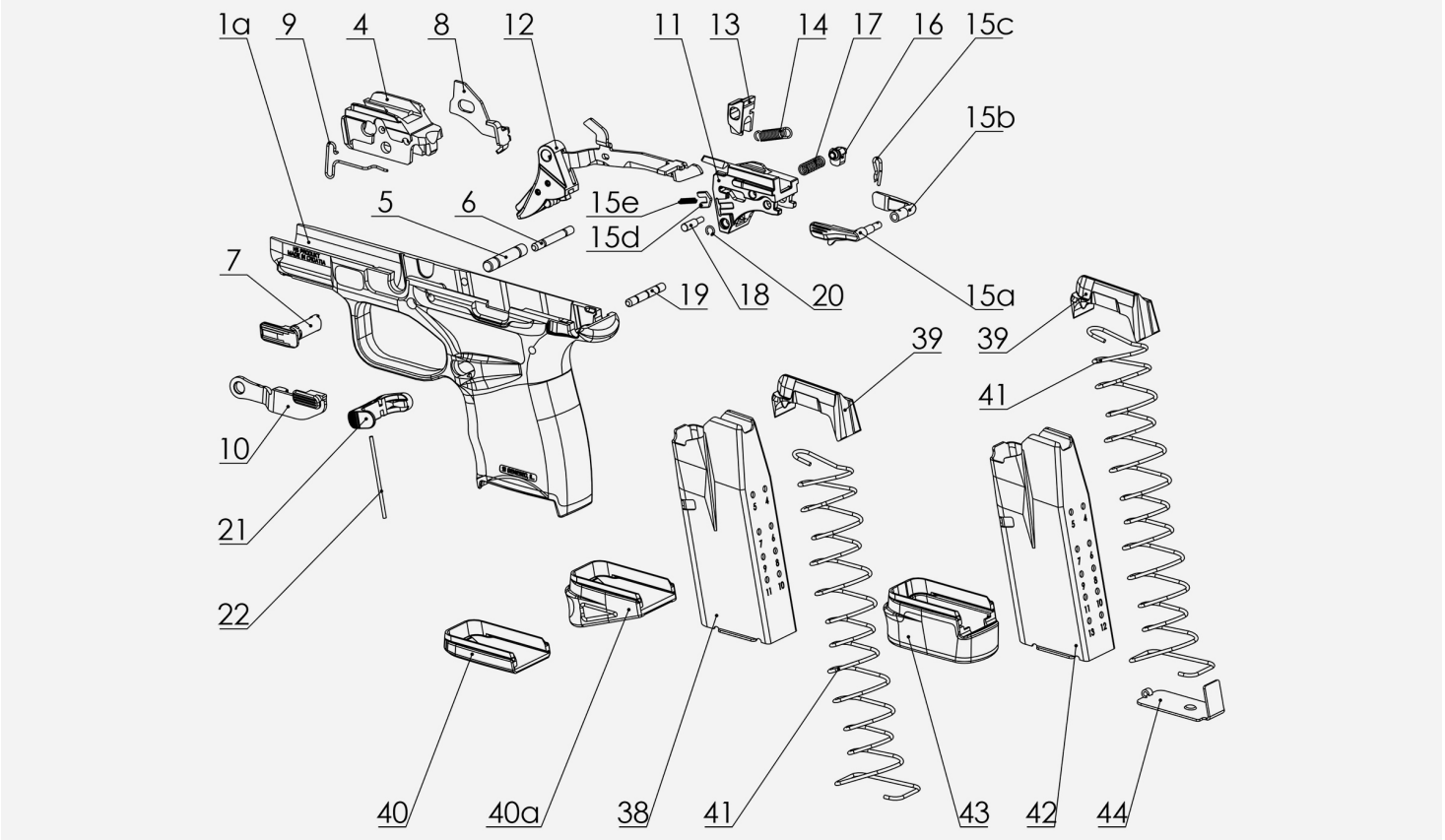

Hellcat Frame w/ Manual Safety Parts List

1 Frame w/ Manual Safety

4 Locking Block

5 Trigger Pin

6 Locking Block Pin

7 Disassembly Lever

8 Magazine Blocking Lever

9 Slide Stop Lever Spring

10 Slide Stop Lever

11 Sear Housing

13 Sear

14 Sear Spring

15a Manual Safety Lever - Left

15b Manual Safety Lever Right

15c Manual Safety Connector

15d Manual Safety Positioner

15e Manual Safety Spring

16 Disconnector

17 Disconnector Spring

18 Disconnector Pin

19 Sear Housing Pin

20 Sear Housing Pin Safety

21 Magazine Catch

22 Magazine Catch Spring

38 Magazine Body 11-Round

39 Magazine Follower

40 Magazine Base 11-Round

41 Magazine Spring

42 Magazine Body 13-Round

43 Magazine Base 13-Round

44 Magazine Floor Plate

HELLCAT® PRO OSP™ SLIDE PARTS LIST

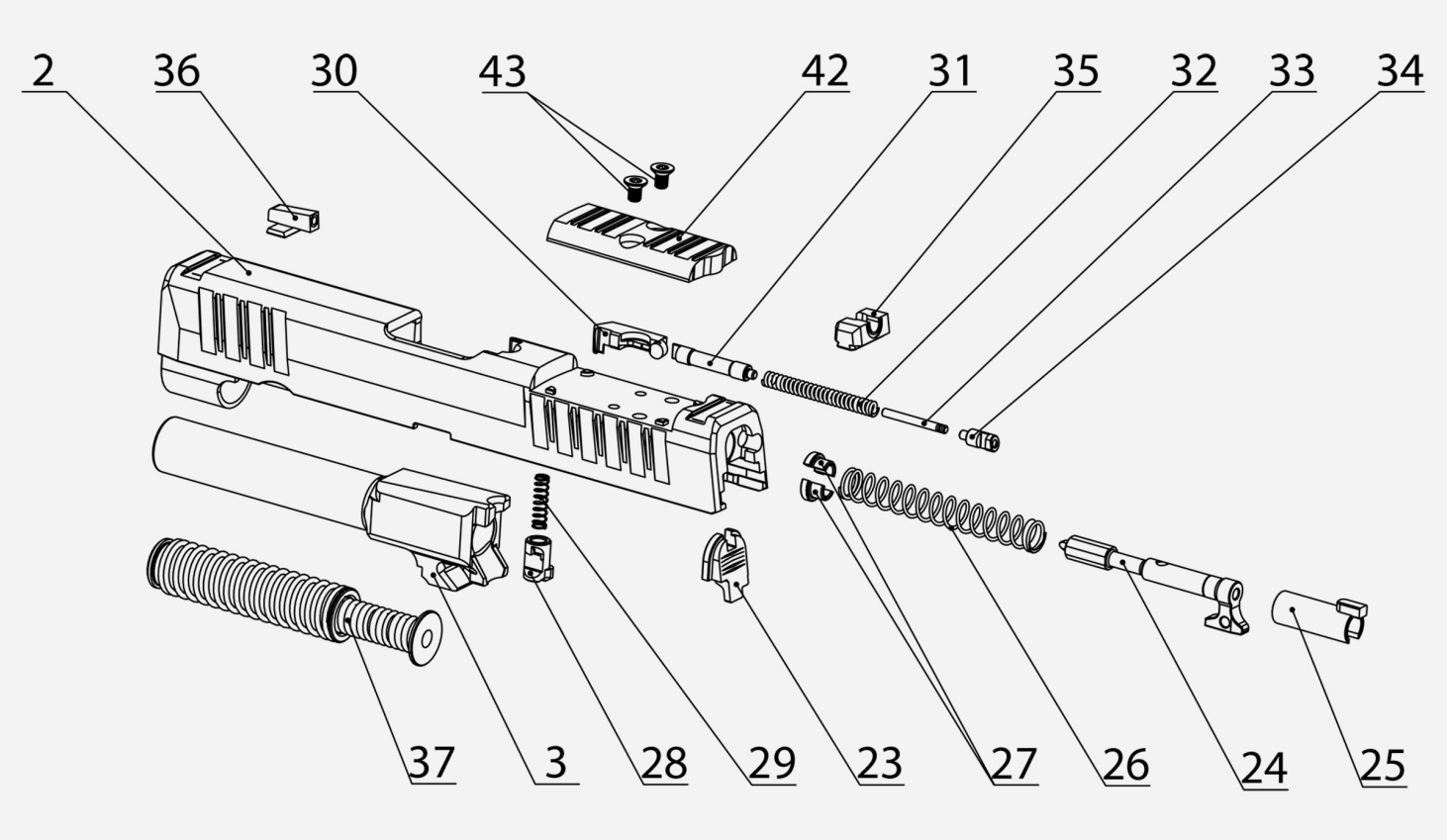

Hellcat Pro OSP Slide Parts List

2 OSP Slide

3 Barrel

23 Striker Locking Plate

24 Striker

25 Striker Guide

26 Striker Spring

27 Striker Spring Retainer

28 Striker Pin Safety

29 Striker Safety Spring

30 Extractor

31 Extractor Pin

32 Extractor Spring

33 Extractor Spring Pin

34 Extractor Spring Plate

35 OSP Rear Sight

36 Front Sight

37 Recoil Spring Assembly

42 OSP Plate

43 OSP Screw

HELLCAT® PRO OSP™ FRAME PARTS LIST

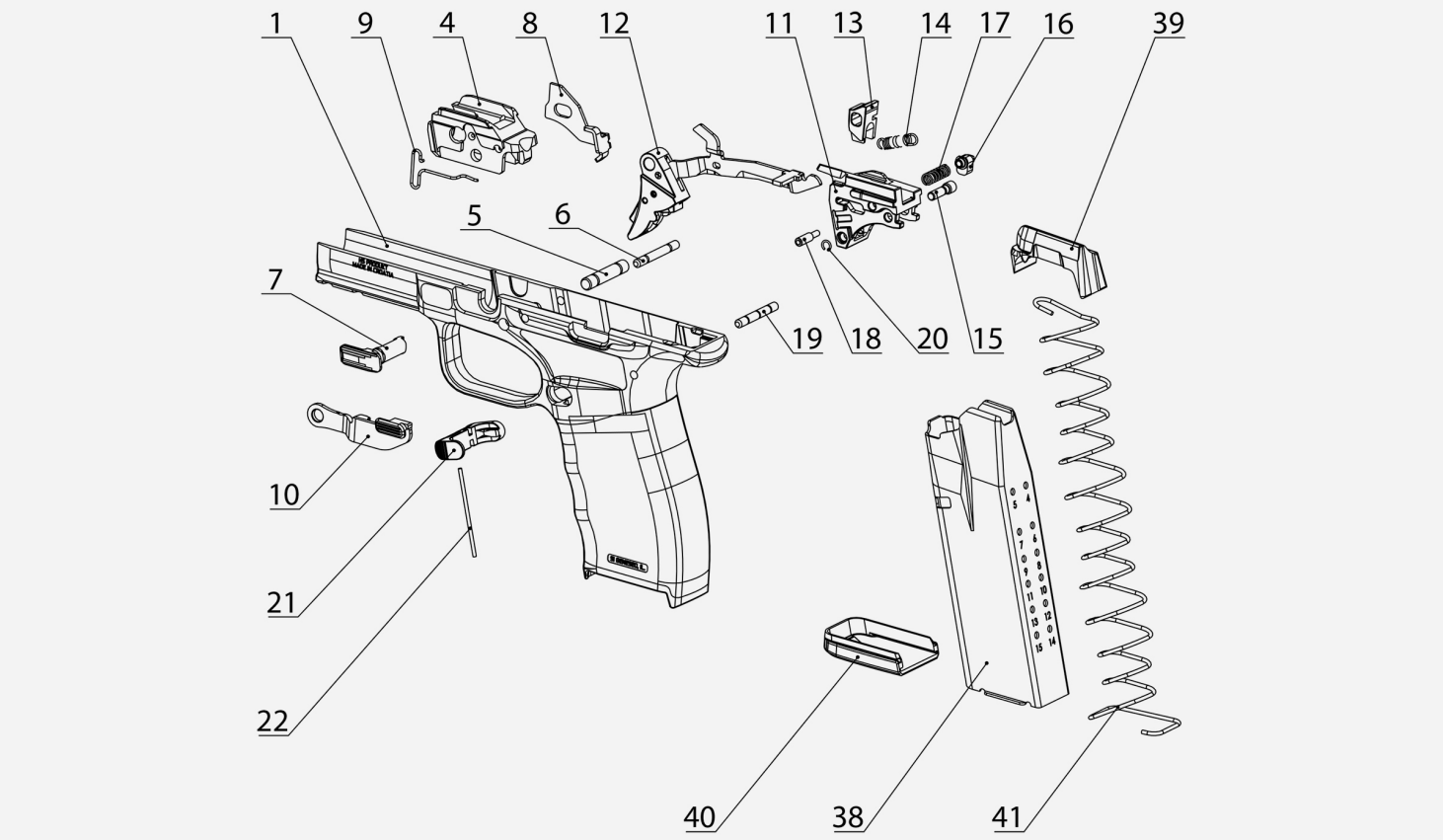

Hellcat Pro OSP Frame Parts List

1 Frame

4 Locking Block

5 Trigger Pin

6 Locking Block Pin

7 Disassembly Lever

8 Magazine Blocking Lever

9 Slide Stop Lever Spring

10 Slide Stop Lever

11 Sear Housing

12 Trigger Assembly

13 Sear

14 Sear Spring

15 Sear Spring Pin

16 Disconnector

17 Disconnector Spring

18 Disconnector Pin

19 Sear Housing Pin

20 Sear Housing Pin Safety

21 Magazine Catch

22 Magazine Catch Spring

38 Magazine Body 15-Round

39 Magazine Follower

40 Magazine Base

41 Magazine Spring

SELF INDEXING COMPENSATOR

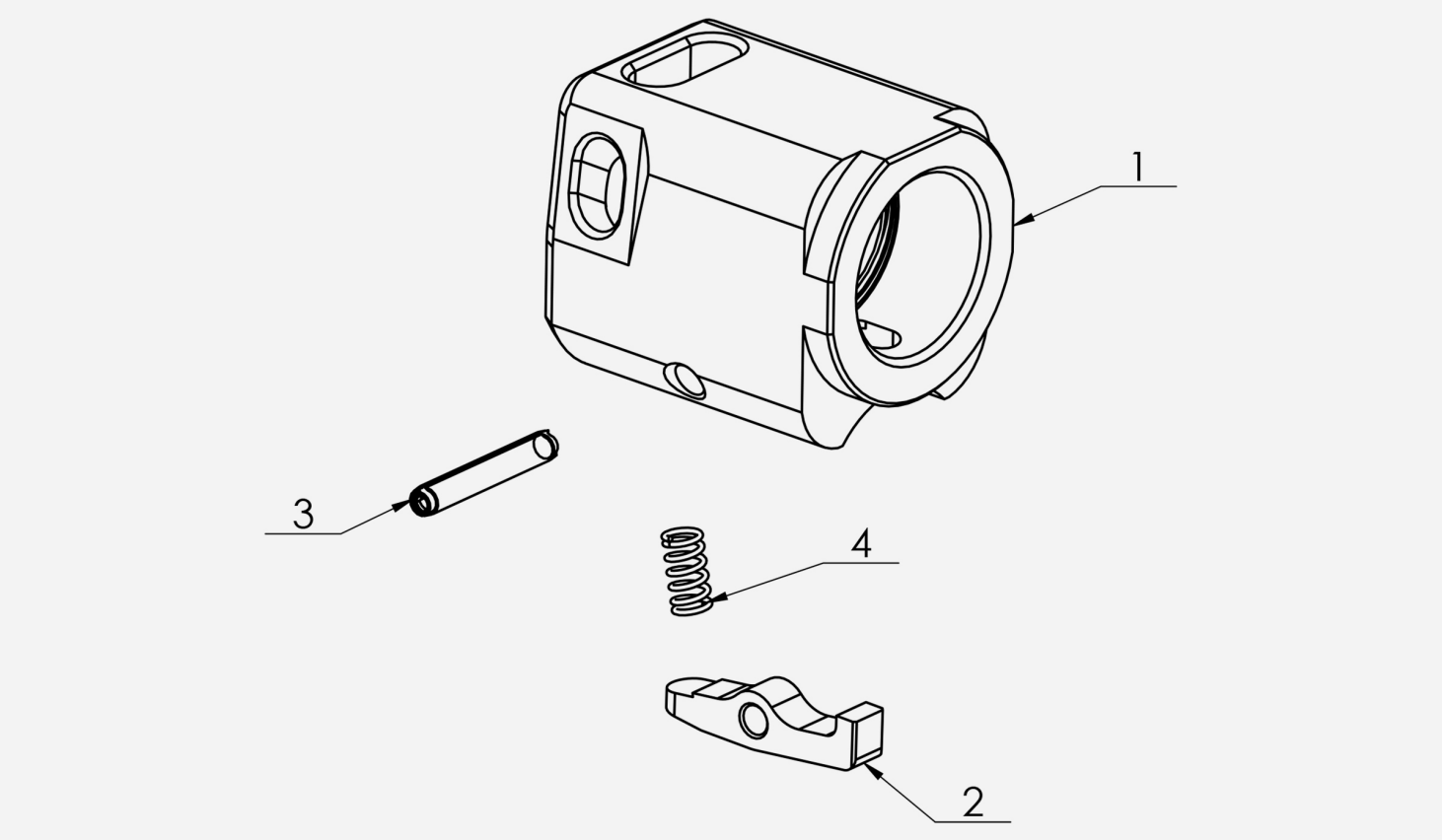

Self Indexing Compensator Parts List

1 Compensator - 9mm

2 Compensator Lever - 9mm

3 Roll Pin 2x14

4 Compensator Spring

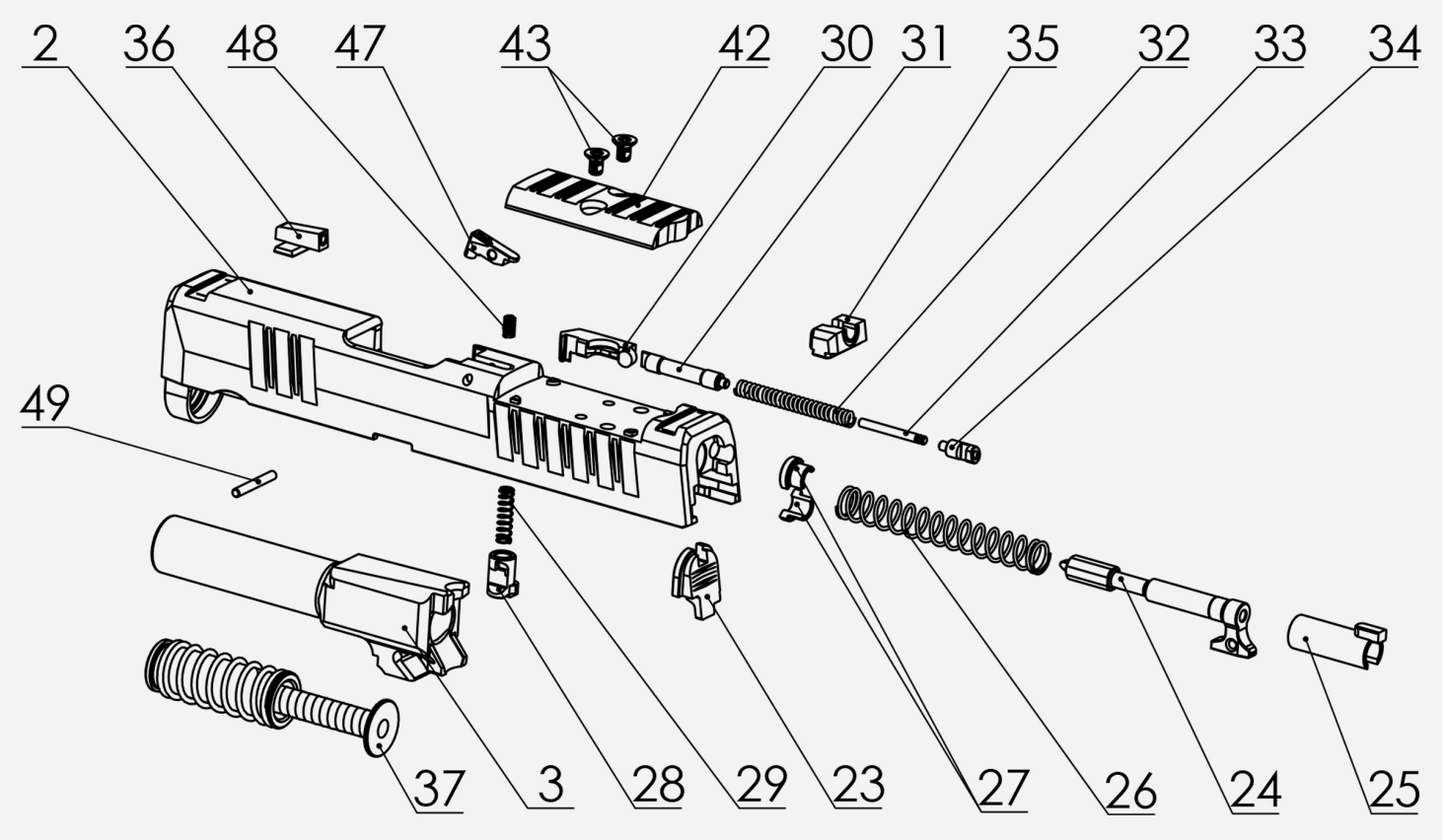

Hellcat - OSP CA Slide Parts List

2 Slide OSP

3 Barrel

23 Striker Locking Plate

24 Striker

25 Striker Guide

26 Striker Spring

27 Striker Spring Retainer

28 Striker Pin Safety

29 Striker Safety Spring

30 Extractor

31 Extractor Pin

32 Extractor Spring

33 Extractor Spring Pin

34 Extractor Spring Plate

35 Rear Sight OSP

36 Front Sight

37 Recoil Spring Assembly

42 Plate OSP

43 Screw OSP

47 Loaded Chamber Indicator

48 Loaded Chamber Indicator Spring

49 Loaded Chamber Indicator Pin

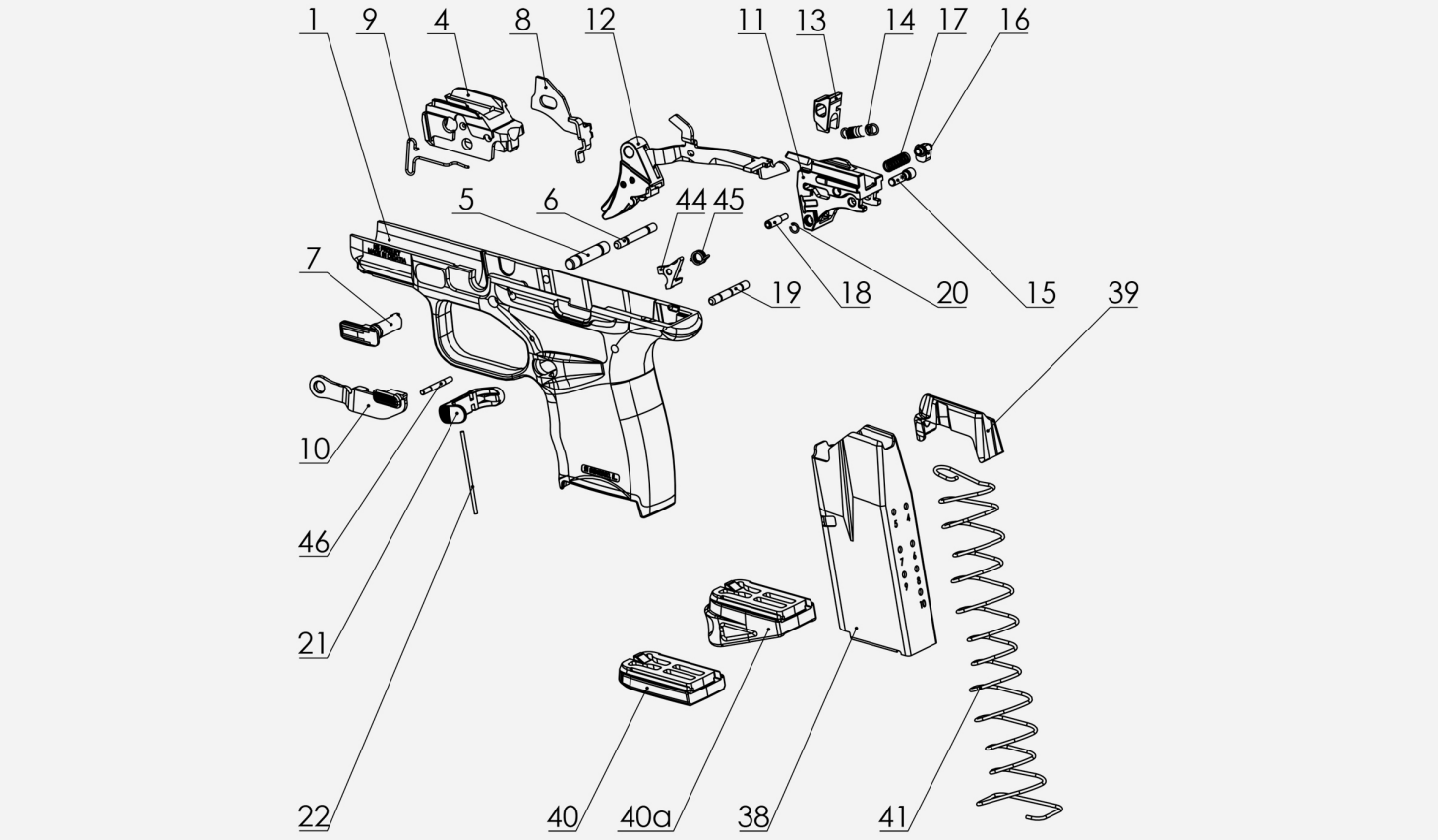

Hellcat - OSP CA Frame Parts List

1 Frame

4 Locking Block

5 Trigger Pin

6 Locking Block Pin

7 Disassembly Lever

8 Magazine Blocking Lever

9 Slide Stop Lever Spring

10 Slide Stop Lever

11 Sear Housing

12 Trigger Assembly

13 Sear

14 Sear Spring

15 Sear Spring Pin

16 Disconnector

17 Disconnector Spring

18 Disconnector Pin

19 Sear Housing Pin

20 Sear Housing Pin Safety

21 Magazine Catch

22 Magazine Catch Spring

38 Magazine Body - 10 RND

39 Magazine Follower

40 Magazine Base - 10 RND

40a Magazine Base - 10 RND Extended

41 Magazine Spring - 10 RND

44 Magazine Disconnect

45 Magazine Disconnect Spring

46 Magazine Disconnect Pin

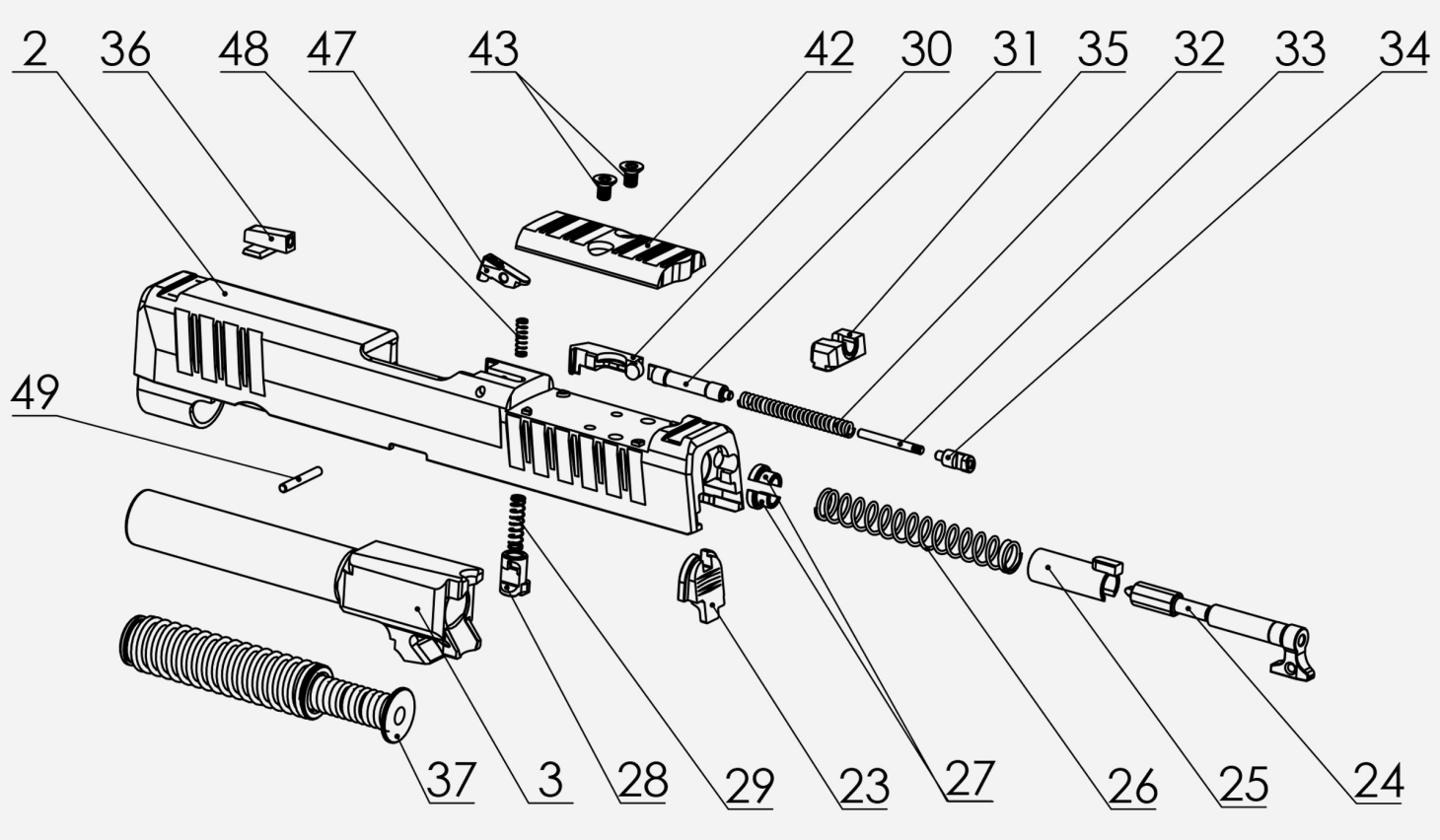

Hellcat Pro - OSP CA Slide Parts List

2 Slide OSP

3 Barrel

23 Striker Locking Plate

24 Striker

25 Striker Guide

26 Striker Spring

27 Striker Spring Retainer

28 Striker Pin Safety

29 Striker Safety Spring

30 Extractor

31 Extractor Pin

32 Extractor Spring

33 Extractor Spring Pin

34 Extractor Spring Plate

35 Rear Sight OSP

36 Front Sight

37 Recoil Spring Assembly

42 Plate OSP

43 Screw OSP

47 Loaded Chamber Indicator

48 Loaded Chamber Indicator Spring

49 Loaded Chamber Indicator Pin

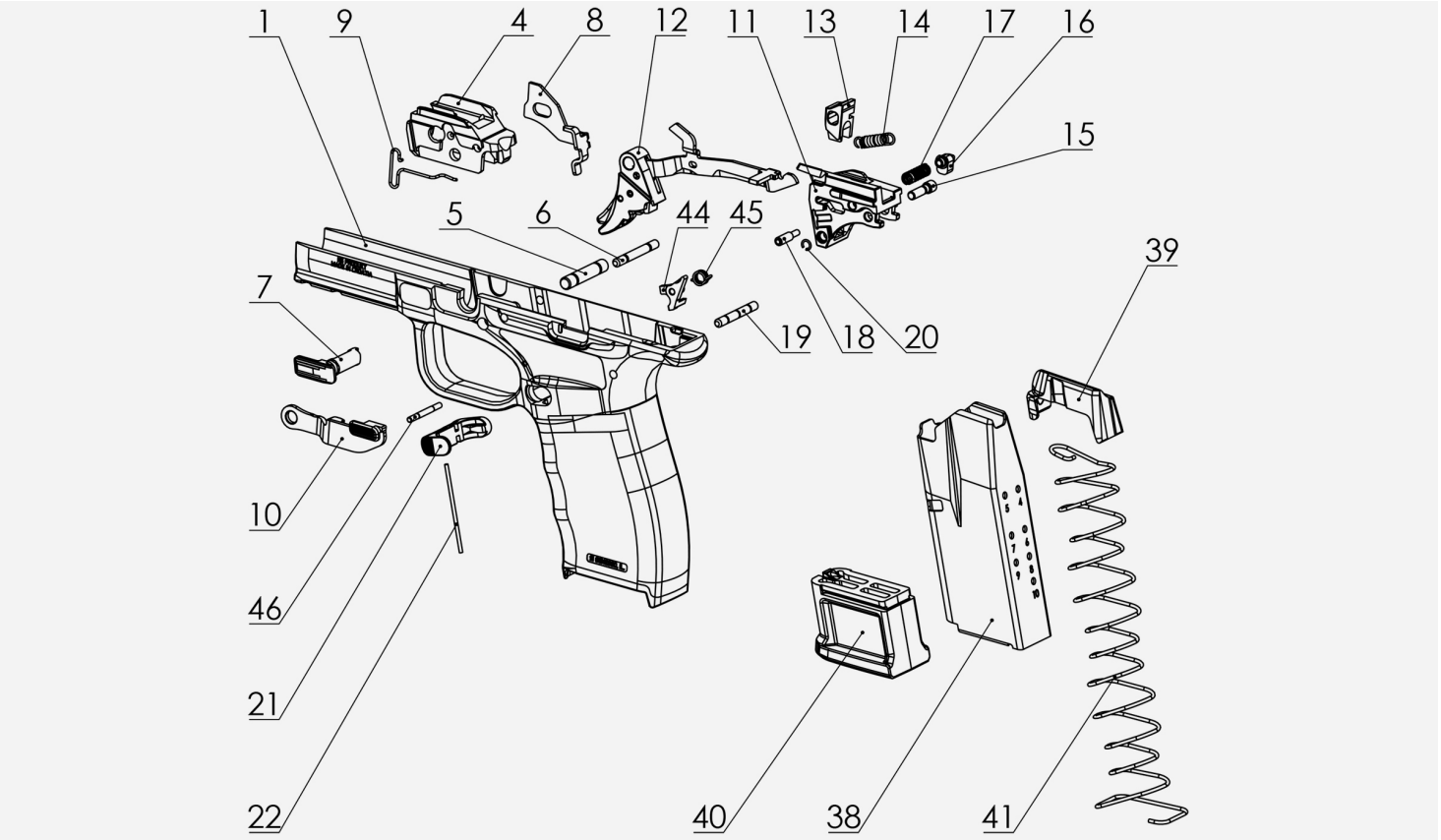

1 Frame

4 Locking Block

5 Trigger Pin

6 Locking Block Pin

7 Disassembly Lever

8 Magazine Blocking Lever

9 Slide Stop Lever Spring

10 Slide Stop Lever

11 Sear Housing

12 Trigger Assembly

13 Sear

14 Sear Spring

15 Sear Spring Pin

16 Disconnector

17 Disconnector Spring

18 Disconnector Pin

19 Sear Housing Pin

20 Sear Housing Pin Safety

21 Magazine Catch

22 Magazine Catch Spring

38 Magazine Body

39 Magazine Follower

40 Magazine Base - 10 RND

41 Magazine Spring - 10 RND

44 Magazine Disconnect

45 Magazine Disconnect Spring

46 Magazine Disconnect Pin

LOADING / PREPARING TO FIRE

1. Place the **EMPTY** magazine in the magazine well, located in bottom of firearm grip. Make sure the magazine is **EMPTY** or you will inadvertently load the firearm. Push firmly enough on bottom of magazine to make sure it is properly seated. A distinctive “click” will confirm the magazine has been properly inserted. Pull the slide completely to the rear until it locks back.

---

2. Depress magazine release and remove magazine.

---

3. Ensure that you are using the proper caliber ammunition for your firearm. Place rim of first cartridge on front of follower (Figure 16-1) then push the cartridge down on the follower and slide the cartridge under the lips of the magazine completely to the rear. Load successive rounds by pushing cartridge down on previously loaded cartridge. Use only clean, dry, original, high-quality, commercially manufactured ammunition. Using reloaded ammunition may void warranty.

---

4. **POINT FIREARM IN A SAFE DIRECTION AND KEEP FINGER OFF TRIGGER.** Re-insert **LOADED** magazine into magazine well, located in bottom of firearm grip. Push firmly enough on bottom of magazine to make sure it is properly seated.

---

5. **WARNING: Never touch the trigger when loading or unloading the firearm.**

---

6. **CAUTION: Do not slam or forcefully jam magazine into magazine well.**

---

7. Depress the slide stop lever to allow slide to move forward and load a cartridge from the magazine into the chamber.

---

8. The loaded chamber indicator will display a loaded cartridge in the chamber.

---

9. **CAUTION: The firearm is now loaded and ready to fire.**

NOTE: An alternative method to load the cartridge into the chamber is to forcefully pull the slide completely to the rear and in one motion quickly release it, allowing the slide to slam forward unimpeded under its own force. (Do not hold the slide as it

moves forward. “Riding the slide” in this manner can cause cartridge to jam or misfeed.)



Hellcat Figure 16-1

WARNING: Never load cartridge by hand directly into the chamber.

WARNING: Do not cover the ejection port with your hand when loading/unloading your firearm

FIRING

If you have never fired a firearm before, follow the sequence of operations shown here without ammunition or with snap caps. Then load only **one** cartridge into the magazine for your first live ammunition firing.

1. **POINT FIREARM IN A SAFE DIRECTION WHILE KEEPING YOUR FINGER OFF OF THE TRIGGER.**

---

2. Load cartridge into chamber from magazine following the procedure described in the LOADING / PREPARING TO FIRE section.

---

3. **CAUTION: THE FIREARM IS NOW READY TO FIRE. BE PREPARED FOR NOISE AND RECOIL WHEN FIREARM FIRES.**

---

4. Aim firearm at target by aligning sights (See POINT OF AIM section).

---

5. Now lightly place finger on trigger, and slowly squeeze trigger to fire the firearm. Spent cartridge is expelled up and to the right.

---

6. This Firearm will automatically be ready to fire again after each shot until all cartridges loaded in magazine have been fired. **NOTE:** This only applies when there is more than one round in magazine.

---

7. When last cartridge has been fired, slide will lock open and remain to rear.

This is an auto loading firearm. It is immediately loaded and ready to fire again after each shot until all cartridges loaded in magazine have been fired. Some Hellcat pistols are available with a magazine disconnect. These pistols will **NOT** fire when the magazine is removed.

WARNING: Loading by manually inserting a round in the chamber is improper and may cause accidental discharge and possible damage to the extractor . Always load the firearm using the magazine . When loading the firearm, always point the muzzle in a safe direction

⚠ **ALWAYS REMOVE YOUR FINGER FROM THE TRIGGER AND FROM THE TRIGGER GUARD WHEN REMOVING A MAGAZINE. FAILURE TO DO SO COULD RESULT IN AN UNINTENDED DISCHARGE!**

⚠ **NEVER REMOVE THE MAGAZINE WITH YOUR FINGER ON OR NEAR THE TRIGGER!**

UNLOADING / CLEARING

If slide is already in “locked back” position: (Figure 18-1)

1. **POINT FIREARM IN SAFE DIRECTION WHILE KEEPING YOUR FINGER OFF OF THE TRIGGER.**
2. Press magazine release button to remove magazine.
3. From above and rear, carefully inspect chamber to make sure it is empty.

When magazine has been removed and when chamber is empty, a firearm lock can be installed. Firearm can now be safely stored in a secure place.

CAUTION: Do not cover the ejection port with you rhand when loading/unloading your firearm.

If slide is forward:

1. **POINT FIREARM IN SAFE DIRECTION WHILE KEEPING YOUR FINGER OFF OF THE TRIGGER.**
2. Press magazine release button to remove magazine.
3. While holding slide in rearward (open) position, carefully inspect chamber making sure it is empty (Figure 18-1).

When magazine has been removed and when chamber is empty, a firearm lock can be installed. Pistol can now be safely stored in a secure place.



Hellcat Figure 18-1

WARNING: Firearm is not empty or unloaded until the magazine is removed and the chamber is empty. To properly clear a firearm, remove the magazine, then pull slide back and check the chamber.

POINT OF AIM

Point of Impact. The users may use a “point of aim” sight picture at 25 yards (Figure 52-1). This means that, at 25 yards, the bullet should impact the target at the point visible at the top of the front sight. Springfield, Inc. firearms are regulated to shoot point of aim, point of impact. Changing brand or type of ammunition may alter point of impact as well as user's technique.



Figure 52-1

CAUTION: Use only clean, dry, original, high-quality, commercially manufactured ammunition.

MALFUNCTION WARNING!

If cartridge hangs up, jams or binds when being chambered from magazine into chamber, do not attempt to force it into the chamber by pushing or striking slide.

DO NOT COVER THE EJECTION PORT WITH YOUR HANDS WHEN LOADING/UNLOADING YOUR FIREARM.

NOTE: The HELLCAT® pistol requires A FIRM PROPER GRIP & LUBRICATION to assure reliable function.

What to do:

1. Firmly hold firearm pointed in a safe direction while keeping your finger off of the trigger.

2. Remove magazine.

3. Retract the slide to remove cartridge from firearm.

4. Do not cover the ejection port with your hands when loading / unloading your firearm.

5. If the cartridge cannot be removed, retract the slide and lock it open with slide stop.

6. Carefully dislodge cartridge.

7. If cartridge cannot be removed, lock slide back, carefully store your firearm and magazines and take it to a pistolsmith. (USE SUPPLIED TRIGGER LOCK)

Most failures to feed or chamber a cartridge are the result of a damaged magazine, improper firearm handling or defective ammunition.

Whatever the cause, a jammed cartridge can be a dangerous situation.

If you have any questions concerning information in this manual, call Springfield's Consumer Safety Department at 1-800-680-6866 for assistance.



Hellcat Figure 20-1

WARNING: Always have firearm pointed in a safe direction. Failure to obey safety information may result in injury to you or others.

TO ELIMINATE MALFUNCTIONS

First try changing type/brand of ammunition and/or magazine.

If changing to another type/brand of ammunition and/or magazine does not at once result in smooth feeding of cartridges from magazine to chamber, the following steps should be taken:

- Make certain chamber and magazine are unloaded.

- Magazine should be removed first. Check chamber to be sure it and magazine well are clear of cartridges.

- Thoroughly clean magazine, paying particular attention to removing accumulated residue.

- Thoroughly clean breech mechanism of firearm. Use a bristle brush and solvent to remove residue and fouling from breech face, extractor, chamber and feed ramp. (See CARE AND CLEANING section for detailed instruction).

- Check that magazine spring tension is adequate; the spring should hold the follower tightly against the lips of the magazine.

- Check that magazine lips are free of nicks and burrs and are not deformed.

- Remove excess oil and solvent from all cleaned components, load magazine and try firearm again.



WARNING: An obstructed, cracked, or damaged barrel should never be used and the firearm should be returned to Springfield for inspection.

FIELD STRIP

Before performing any cleaning or maintenance, make sure the firearm is completely unloaded (this includes the magazine and chamber). Wear eye protection.

ALWAYS REMEMBER CERTAIN MODELS OF THE FIREARM ARE ABLE TO FIRE WITH OR WITHOUT A MAGAZINE (SEE PAGE 12).

1. **POINT FIREARM IN SAFE DIRECTION WHILE KEEPING FINGER OFF THE TRIGGER.**

2. Remove magazine and unload firearm.

3. Retract the slide and lock it open by pushing up the slide stop lever (See Figure 22-1). NOTE: If step 3 is difficult, use this alternative method of locking slide to the most rearward position: Place **EMPTY** magazine in the magwell, retract slide completely to the rear until it locks back. Make sure the magazine is **EMPTY** or you will inadvertently load the firearm. Then remove magazine and proceed.

4. Visually inspect the chamber to confirm the firearm is unloaded.

5. Rotate the disassembly lever clockwise to a vertical 12 o'clock position (See Figure 22-2). Disassembly lever cannot be rotated unless magazine has been removed.

6. Pull the slide slightly to the rear to release the slide stop lever. Then, firmly gripping the slide, allow the slide to slowly move forward until the spring tension is released (See Figure 23-1).

7. **CAUTION: Slide is under spring tension. Maintain control. Do not grip the slide in the area of the muzzle or ejection port.**

8. While holding the slide, pull the trigger with the firearm pointed in a safe direction to fully unlock the slide from the frame. NOTE: : Trigger will not re-set or release at this point, but will remain in the most rearward position (See 23-2). If you move trigger forward you cannot reassemble pistol.

9. **CAUTION: : Do not retract and release the striker allowing it to snap forward as this can damage the striker pin safety.**

10. Move the complete slide assembly forward and off the frame (See Figure 23-2).

11. Remove the recoil system from the slide (See Figure 24-1).

12. **CAUTION: Captive Recoil Spring System. Spring is under tension. Maintain control.**

13. Remove the barrel from the slide (See Figure 24-2). The Hellcat RDP models require removal of the compensator before barrel can be removed from slide, See Self Indexing Compensator (Page 54-55) section for removal and installation of RDP Compensator.

The firearm is now fully field stripped and ready for cleaning.



Hellcat Figure 22-1



Hellcat Figure 22-2



Hellcat Figure 23-1



Hellcat Figure 23-2



Hellcat Figure 24-1



Hellcat Figure 24-2

WARNING: Further dismantling is not necessary and should only be done by Springfield, Inc. or a qualified gunsmith.

WARNING: If you disassemble your Springfield Armory® firearm, do so properly. Improper disassembly and/or assembly will create unsafe conditions that could result in injury or death, or a firearm that simply will not work. Don't take chances. Do not attempt to disassemble this or any other firearm until you have received training and instructions from a competent gunsmith.

MAGAZINE DISASSEMBLY

Disassembling and cleaning magazines every 3-4 months is normally sufficient, unless the magazines have been exposed to dirt or other adverse conditions or inspection indicates a need for cleaning.

Disassembly of the HELLCAT® 11 round magazine is accomplished by depressing the magazine spring (Figure 25-1) and sliding the base plate forward.

Disassembly of the HELLCAT® 13 round magazine is accomplished by depressing the magazine floor plate (Figure 25-2) and sliding the base plate forward.

NOTE: Make note of magazine spring orientation.

ALWAYS WEAR PROTECTIVE SAFETY GLASSES WHEN DISASSEMBLING OR REASSEMBLING ANY MAGAZINE.



ellcat Figure 25-1



Hellcat Figure 25-2

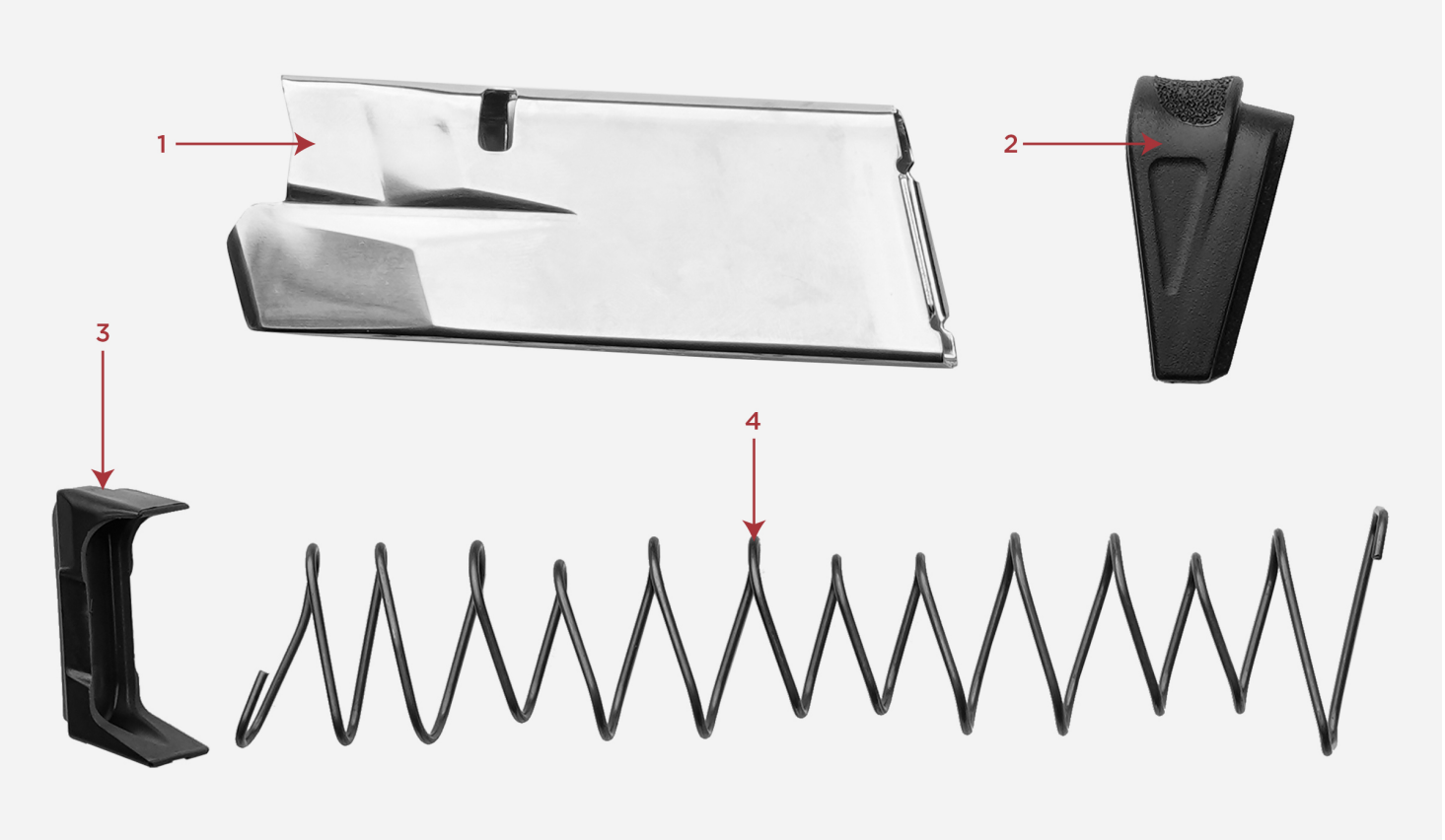

Hellcat 11-Round Magazine Parts List

1 Magazine Body

2 Magazine Base

3 Magazine Follower

4 Magazine Spring

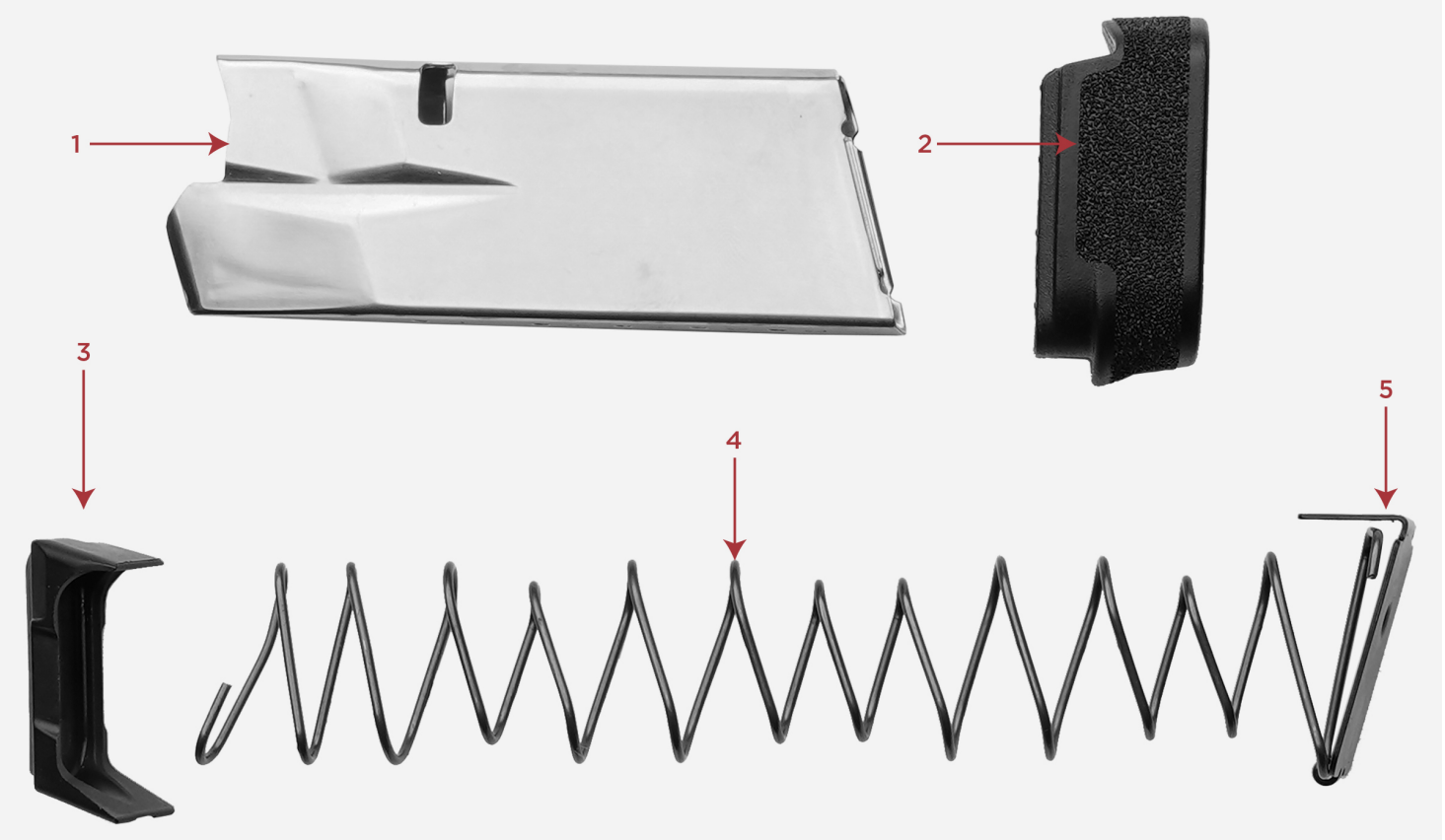

Hellcat 13-Round Magazine Parts List

1 Magazine Body

2 Magazine Base Ext.

3 Magazine Follower

4 Magazine Spring

5 Magazine Floor Plate

WARNING: The magazine spring, follower, and inner floor plate are under spring tension, and can cause eye injury if not controlled during removal. Wear protective safety glasses to reduce the risk of eye injuries. Be sure to maintain downward pressure on the magazine spring, with your thumb, while disassembling.

MAGAZINE BUTTON REVERSAL

Remove magazine and unload firearm. Remove slide assembly as outlined on page 22.

1. Insert a pick or small screwdriver blade from the top of the magwell opening (Figure 26-1) and force the spring towards the retention notch (Figure 26-1) on the magazine button, then pry rearward and the spring will be released from the magazine button and will be in a vertical (Figure 26-2) position.

---

2. Using a suitable tool such as needle nose pliers or similar grasp the spring from above and remove it upwards (Figure 26-3).

---

3. The magazine button can now be removed from the frame. Remove the button smooth side first (Figure 27-4). Reverse the orientation of the mag catch and install the button textured side first (Figure 27-5).

---

4. Using the pliers or other suitable tool install the spring into the frame pocket (See Figure 24-6) insuring its fully seated and in a vertical orientation. With the screwdriver or pick press the top of the spring over and into the retention notch (Figure 27-7) of the magazine button body. The procedure is now complete.

Verify proper function of the magazine button and reassemble pistol.

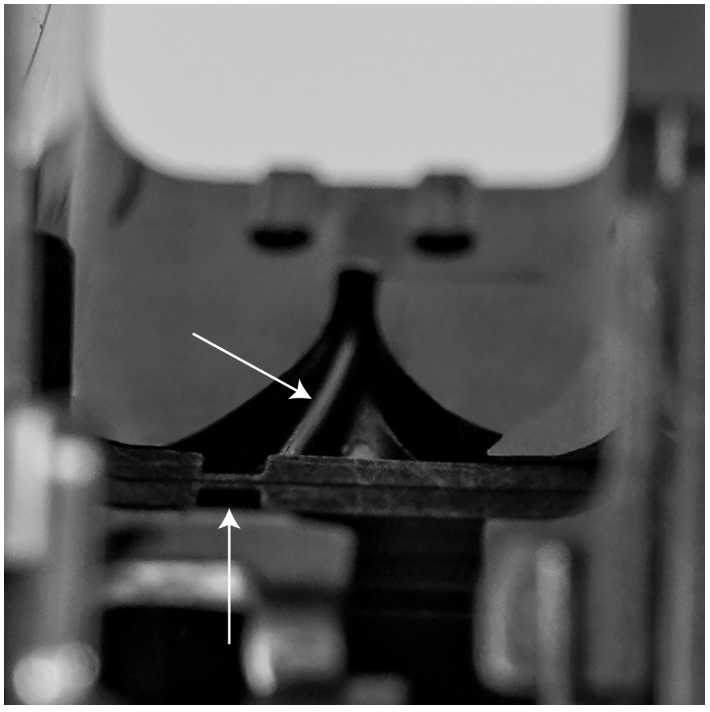

Hellcat Figure 26-1



Hellcat Figure 26-2

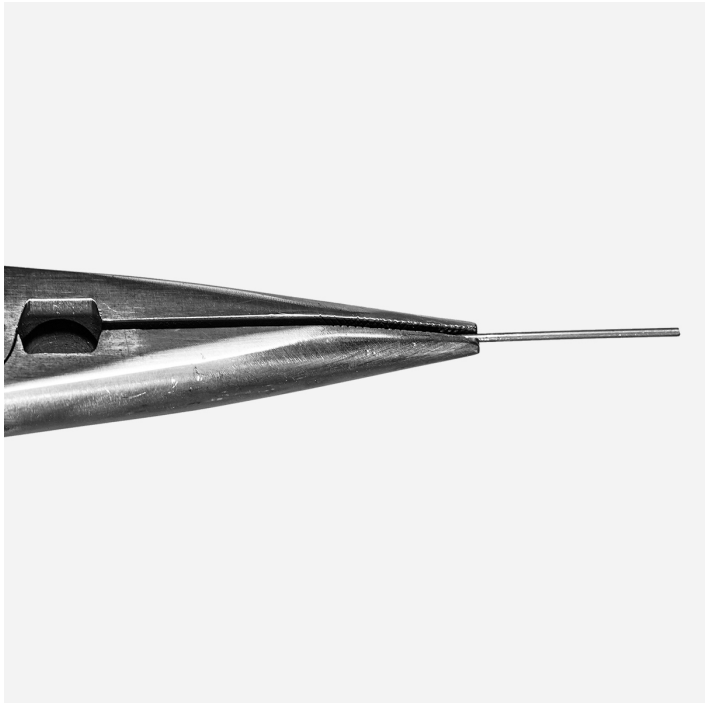

Hellcat Figure 26-3



Hellcat Figure 27-4



Hellcat Figure 27-5

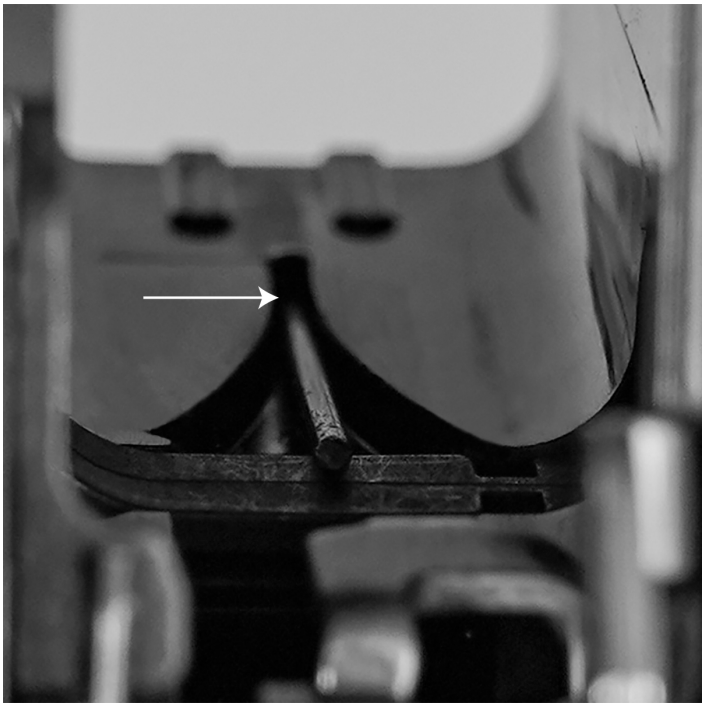

Hellcat Figure 27-6

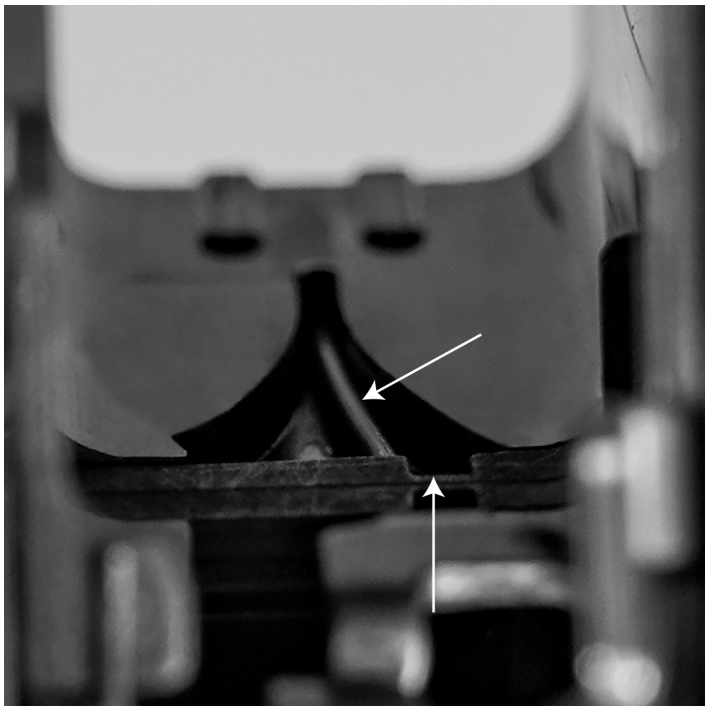

Hellcat Figure 27-7

REASSEMBLY

CAUTION: Never allow live ammunition in the area while you are maintaining your firearms.

1. Install barrel into slide (Figure 28-1) insuring that the top of the chamber of the barrel is flush with the top of the slide (Figure 28-2). On RDP models, install the compensator, see Self Indexing Compensator (Page 54-55) section.

---

2. Reinstall the recoil system insuring it is properly aligned (Figure 28-3). **NOTE: IMPROPERLY ALIGNED RECOIL SYSTEM OR BARREL POSITION WILL CAUSE REASSEMBLY PROBLEMS. NEVER FORCE SLIDE ASSEMBLY ONTO FRAME.**

---

3. Install the slide assembly onto the frame, making sure that the trigger is in the rearward position (Figure 28-4). If interference is encountered, remove the slide assembly and make sure the barrel is properly seated, the recoil system is properly aligned and the trigger is in its most rearward position. **NEVER FORCE SLIDE ASSEMBLY ONTO FRAME! Doing so could cause damage to your firearm.**

---

4. (Figure 29-1) Move the slide to its most rearward position (at this point spring resistance will be encountered) and move/push the slide stop up, locking the slide to the rear.

5. Rotate the disassembly lever counter-clockwise to the normal (locked) position.

6. Lower the slide.

7. Reassembly is now complete.



Hellcat Figure 28-1



Hellcat Figure 28-2



ellcat Figure 28-3



Hellcat Figure 28-3



Hellcat Figure 28-4



Hellcat Figure 29-1



SELF INDEXING COMPENSATOR

WARNING: Make sure the firearm is completely unloaded, magazine removed and chamber clear.

WARNING: Never attempt to install or remove the compensator with slide assembly attached to frame!

NOTE: Take note of the correct compensator orientation. The port on the top of the compensator must face upwards (Figure 30-1)

COMPENSATOR REMOVAL PROCEDURE:

1. Unload pistol and remove slide assembly as outlined on page 18.

2. Depress the locking lever on the bottom of the compensator (Figure 30-2) and while depressing the tab unscrew the compensator by rotating the slide assembly. After several revolutions you can release pressure on the lever. Continue to unscrew until the compensator is free.



Hellcat Figure 30-1



Hellcat Figure 30-2

COMPENSATOR INSTALLATION:

1. Depress the locking lever on the bottom of the compensator (Figure 31-1) and while depressing the locking lever screw on the compensator by rotating the slide assembly

or turning the compensator. After several revolutions you can release pressure on the lever.

2. Continue turning the compensator until it stops, back off half turn, then depress the locking lever and continue turning until the compensator stops again.

3. At this point the compensator will not be aligned with the top of the slide (Figure 31-2).

4. Release pressure on the locking lever and rotate the compensator in the reverse direction until the top of the compensator aligns with the top of the slide (Figure 31-3). At this point the lever will “snap” into the locked position and you will hear an audible “click”. The compensator will now be locked into position. Verify locking condition by attempting to rotate comp in both directions.

5. Installation is now complete.

6. Install the slide assembly on the frame as described on page 28.

7. Manipulate the slide several time to verify proper function

NOTE: Always test fire your pistol to confirm proper function after compensator installation.



Hellcat Figure 31-1



Hellcat Figure 31-2



Hellcat Figure 31-3



OSP™ OPTICS INSTALLATION

WARNING: Make sure the firearm is completely unloaded, magazine removed and chamber clear.

NOTE: After installation of your optic, test fire to verify proper function.

1. Using a Torx driver, remove 2 screws that retains OSP™ Plate. (Figure 33-1 & 33-2)

---

2. Install your optic to OSP™ Pocket (Figure 33-3). Using M4-0.7 threaded screw at correct length.

---

3. If you chose to use thread locker, use sparingly and on screws only. **DO NOT** apply thread locker to threaded holes in OSP pocket (Figure 33-4). Using too much thread locker can foul mechanism.

NOTE: Screws for optic may require shortening. Screws cannot protrude more than 0.095” (2.4mm) from the bottom of the sight (Figure 33-5)



Hellcat Figure 33-1

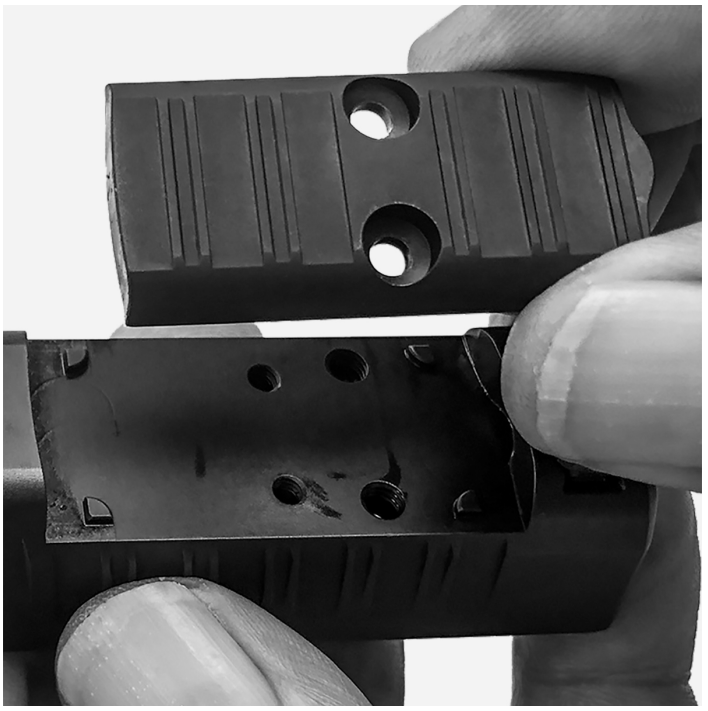

Hellcat Figure 33-2



Hellcat Figure 33-3



Hellcat Figure 33-4



Hellcat Figure 33-5

CARE AND CLEANING

KEEP YOUR FIREARM CLEAN AT ALL TIMES

Basic materials needed:

- Cleaning rod of proper size with bristle bore brushes (fiber or brass) and tip into which cleaning patch can be inserted.
- Cloth patches
- Powder solvent
- Lubricating oil
- Small lint-free cloths for wiping and oiling
- Bristle brush for scrubbing dirt off breech face, extractor, magazine lips, follower, etc.

Use proper size bore brushes and patches - if they are too small they won't do the job, and if they are too large they will bind inside bore.

Insert cleaning rod from chamber end of barrel and push rod all the way through so it emerges from muzzle.

Do not "reverse" rod direction when patch or brush is in barrel, it might bind.

Do not use patches dripping with solvent or oil. Wet patches or brushes, then squeeze out excess before using.

When using bore brushes or a larger bristle brush on breech face, breech areas, magazines, etc., work carefully to prevent damaging components.

NOTE: If lower parts of receiver and its mechanism are especially dirty, soak in appropriate solvent, flush clean with clean solvent. Make certain that all foreign matter is removed after cleaning. Lightly oil after cleaning. Only a very small amount of oil is needed to adequately lubricate moving parts and prevent rust. Accumulation of oil tends to attract dust and dirt which interferes with the safe and reliable functioning of firearm. DO NOT APPLY EXCESS LUBRICATING OIL. DO NOT APPLY OIL OR GREASE TO STRIKER.

WARNING: Wear eye protection when using solvent. Thoroughly wash your hands to remove powder and solvents after cleaning your firearm.

CLEANING FIREARM

1. Point firearm in safe direction.
2. Remove magazine and empty chamber.
3. Separate cartridges from firearm before cleaning operation.
4. Open slide and visually check that chamber and magazine well are free of cartridges.
5. Disassemble firearm as described in the DISASSEMBLY section.
6. Using cleaning rod, run solvent-wetted patch through barrel several times.
7. Attach solvent-wetted bristle brush to rod and run back and forth full length of barrel as needed until clean of residue.
8. Clean barrel with dry patches and examine it. If necessary, repeat barrel scrubbing. Barrel fouling can contribute to reduced accuracy, and residue accumulation in the chamber can interfere with proper feeding of cartridges from magazine.
9. Using powder solvent on a clean patch, remove powder residue from all components of mechanism. If residue cannot be removed by wiping with patch, use solvent-wetted bristle brush.
10. Next, wipe scrubbed areas with solvent-wetted patch.
11. After cleaning, run dry patch through barrel, then follow with lightly oiled patch.

12. Wipe all surfaces clean with cloth, then wipe all surfaces with lightly oiled patch (or cloth).

13. Reassemble firearm. Remember, an improperly assembled firearm is dangerous and should not be fired. Always consult a qualified pistolsmith if you experience any difficulty or have any questions concerning assembly procedure.

14. If firearm is to be stored for an extended period, final oil applications can be heavier so there will be less tendency for it to evaporate.

15. Keep your firearm clean at all times.

POINTS OF LUBRICATION

NOTE: Please read entire manual and follow all safety rules before handling firearm.

1. Field Strip pistol. Only remove slide from frame (See Field Strip Section).

2. Using any quality firearm lubricant, 1 drop of lubricant on each side of the rear slide railways (Figure 32-1).

3. Reassemble slide to frame (See Reassembly Section).

4. Manipulate slide back and forth 5 - 10 times.

5. 1 drop of lubricant on top of chamber area of the barrel (Figure 32-2).

6. Lock slide to the rear.

7. 1 drop of lubricant on the top of the muzzle of the barrel, 1/4" from front top of muzzle (Figure 32-3).

8. **DO NOT LUBRICATE THESE AREAS** (Figure 32-4)

9. Manipulate slide back and forth 5 - 10 times.



Hellcat Figure 32-1

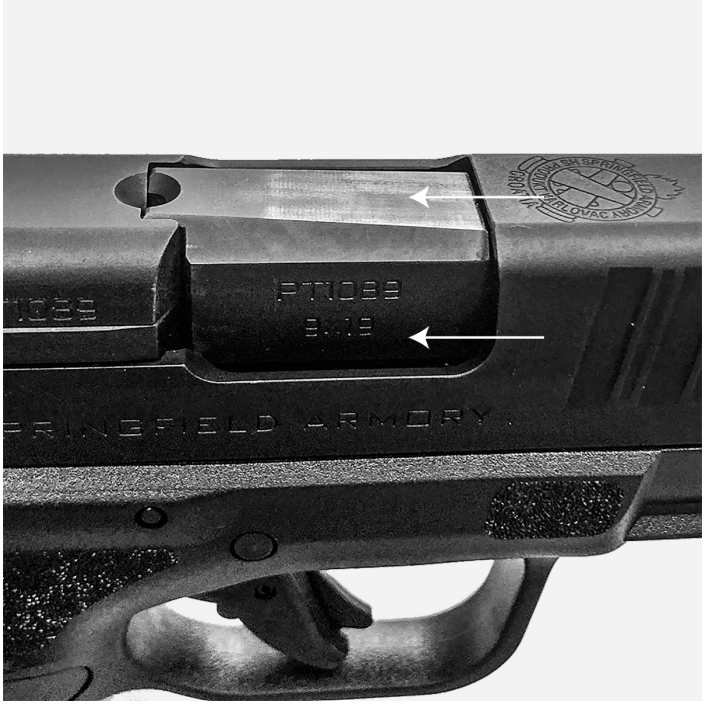

Hellcat Figure 32-2



Hellcat Figure 32-3



Hellcat Figure 32-4

CABLE LOCK

Store key separately away from lock and out of reach of children. This cable lock is supplied as an aid to your security measures.

1. Point gun in safe direction while keeping your finger off the trigger.

2. Press magazine release and remove magazine.

3. Pull slide fully to the rear and lock open.

4. Check to see that no cartridge is in the chamber.

5. Insert cable through the ejection port and out magazine well.

6. Lock cable into cable lock.

7. Grasp slide and ease forward.

CAUTION: GUNS SHOULD ALWAYS BE LOCKED AND STORED IN COMPLETE COMPLIANCE WITH ALL APPLICABLE LAWS AND REGULATIONS.



Hellcat Figure 53-1