April 30, 2019
File No. 02219702.00

Mr. Tom Farrell, Manager
Division of Solid Waste Enforcement
New Jersey Department of Environmental Protection
9 Ewing Street
Trenton, New Jersey 08625-0420

Mr. Jeffery Meyer, Manager
Division of Air Enforcement
Bureau of Air Compliance and Enforcement
New Jersey Department of Environmental Protection
7 Ridgedale Avenue
Cedar Knolls, New Jersey 07927

Subject: April Progress Report
Keegan Landfill
New Jersey Sports and Exposition Authority
EA ID#: NEA 190001-13317

Dear Mr. Farrell and Mr. Meyer:

On behalf of the New Jersey Sports and Exposition Authority (NJSEA), SCS Engineers (SCS) submits this monthly progress report as required by Section C of the Administrative Consent Order (ACO), NEA19001-13317 (executed on March 21, 2019) for the Keegan Landfill. This report summarizes the compliance status and activities performed since the previous progress report was submitted on April 1, 2019.

COMPLIANCE MEASURES AND STATUS

The work progress, summary of problems, activities planned, and required and actual completion dates for each ACO Condition is summarized in the table provided in Attachment 1.

EXPLANATION OF NON-COMPLIANCE WITH ACO SCHEDULE

There were no periods of non-compliance with the ACO during the period of this progress report.

EVALUATION OF CORRECTIVE MEASURES IMPLEMENTED

Since the execution of the ACO on March 21, 2019, the corrective measures implemented include actions intended to minimize intake of the waste that may contain gypsum wallboard, placement of daily cover, placement of additional intermediate cover and minimization of the surface area of the working face. NJSEA reports a reduction in the quantity of Type 13 waste in April 2019, which is indicative of the transfer stations complying with the request to be selective in the waste being sent to Keegan Landfill. There have been no exceedances of N.J.A.C 7:27-7.3 reported to NJSEA in the month of April.

A signed certification of information form is included in Attachment 2. The next report will be submitted on or before June 1, 2019. Please call either of the undersigned with any questions or comments.

Sincerely,

Lisa K. Wilkinson
Project Director I
SCS Engineers

Gregory P. McCarron, PE
Project Director II
SCS Engineers

cc: V. Prieto, NJSEA
T. Marturano, NJSEA
A. Levy, NJSEA
C. Sanz, NJSEA
J. Stewart, Lowenstein

Attachment 1

April 2019 Progress Report Summary
Keegan Landfill (NEA190001-13317)

No.	ACO Condition Description	B. Status of permitting, planning approvals and work progress	C. Difficulties Encountered	D. Activities Planned for next reporting period	E. Required and Actual Completion date
7.a	Submit Monitoring Action Plan (MAP)	On April 1, 2019, MAP was submitted to NJDEP; NJDEP Conditional Approval was received on April 8, 2019; Revised MAP dated April 15, 2019 is included as Attachment 3.	None	None; activity is complete	Required: April 1, 2019 Actual: April 1, 2019
7.b	Install/operate continuous H_2S Ambient Air Monitoring System	NJDEP approval of MAP received on April 8, 2019; Emilcott visited the site on April 2 to review installation locations; lease agreement has been negotiated with Emilcott; Emilcott has been preparing monitors for installation in accordance with the MAP.	None	Installation of the monitoring system will commence on April 30; Startup of the eight monitors will occur on or before May 8th.	Required: May 8, 2019 Actual: TBD
7.c	Notify NJDEP of exceedances or potential to cause odor complaint or air pollution	Leachate Seep Repair Report, Ambient Air Monitoring Evaluation Report, and Surface Emissions Monitoring Report have been provided to NJDEP on April 5th.	None	Monitoring of the ambient air will be provided upon installation and operation of the ambient air monitoring system required under Condition 7.b above; Monitoring data collected by the NJSEA in April using hand-held equipment will be submitted to the NJDEP on May 3, 2019.	Required: upon completion of 7.b above Actual: TBD
7.d	Take measures to control or eliminate emissions	Required upon exceedance of Condition 7.c level	None	NA	Required: upon exceedance of Condition 7.c level Actual: TBD
7.e	Submit estimate of generation of emission rates for H_2S and other air contaminants	Ongoing; tonnage data has been tablulated; generation model is under development	None	Calculation and refinement of the generation model is ongoing.	Required: May 30, 2019 Actual: TBD
7.f	Immediately implement measures to maintain compliance	In accordance with NJSEA letter dated March 29, 2019 to NJDEP, wallboard restrictions have been enforced, additional intermediate soil cover has been placed on the western sideslopes, daily cover has been placed and compacted and active face is minimized.	None	Wallboard restrictions will contine to be enforced; additional intermediate soil cover will continue to be placed; daily cover will continue to be placed and compacted.	Required: N/A Actual: In progress
7.g	If compliance not achieved by September 1, 2019, submit proposal for GCCS	In advance of this requirement, NJSEA has decided to design, permit and install GCCS; NJDEP has been contacted regarding permitting requirements and design of the system has commenced.	None	Design and permit application document preparation is ongoing; NJDEP permitting and enforcement representatives plan to visit the site on May 2, 2019.	Required: 30 days from NJDEP notification Actual: TBD

Attachment 2

NEW JERSEY DEPARTMENT OF ENVIRONMENTAL PROTECTION
CERTIFICATION OF INFORMATION

Facility ID **Keegan Landfill, NEA190001-13317**
COMPANY **New Jersey Sports & Exposition Authority**

1. Responsible Official - This first tier of this certification is to be signed by the responsible official as defined at N.J.A.C 7:27-1.4

"I certify under penalty of law that I have personally examined and am familiar with the information submitted in this document and all attached documents and, based on my inquiry of those individuals immediately responsible for obtaining the information, I believe that the submitted information is true, accurate and complete. I am aware that there are significant civil and criminal penalties, including the possibility of fine or imprisonment or both, for submitting false, inaccurate or incomplete information."

Name (type or print) **Vincent Prieto** Title **President and CEO**

Signature Date 4/30/2019

2. Individual(s) with direct knowledge of and responsibility for the information contained in the certified document (N.J.A.C. 7:27-1.39(a)1)

A. "I certify under penalty of law that I believe the information provided in this document is true, accurate and complete. I am aware that there are significant civil and criminal penalties, including the possibility of fine or imprisonment or both, for submitting false, inaccurate or incomplete information."

Name (type or print) **Lisa K. Wilkinson** Title **SCS Engineers Project Manager (Consultant)**

Signature Date 4/30/2019

Attachment 3

Monitoring Action Plan
Keegan Sanitary Landfill

New Jersey Sports & Exhibition Authority
One Dekorte Park Plaza
P.O. Box 640
Lyndhurst, NJ 07071
201-460-1700

SCS ENGINEERS

02219702.00 | April 15, 2019

4 Executive Boulevard, Suite 303
Suffern, New York 10901
845-357-1510

Table of Contents

Section Page

1 Introduction....1
2 Monitoring Plan....3
Project Organization....3
Fixed Monitoring Program....3
Monitoring Station Locations....3
Monitoring Station Equipment....4
Monitored Parameters....5
Sample Handling Requirements....6
Analytical Method....6
Quality Control....6
Instrument Maintenance....6
Performance Assessment....7
Monitoring Frequency....7
Data Management and Reporting....7
Action Levels....7
Daily Odor Inspection Program....8
Data Management and Reporting....8
Future Program Modifications....8
3 Action Plan....9
Odor Mitigation Activities....9
Interim Cover Improvements....9
Odor Neutralizing Agents....9
Long-term Actions....10
Gas Collection and Control System....10

Tables

Table 1. Project Organization....3
Table 2. Monitoring Station Locations....4
Table 3. Specifications for Hydrogen Sulfide and Wind Speed/Direction Monitors....5
Table 4. Quality Control Activities....6
Table 5. Maintenance Schedule....7

Appendices

Appendix A Monitoring Station Location Plan
Appendix B Equipment Cut Sheets
Appendix C Jerome 631-X Analyzer User Manual
Appendix D Daily Odor Inspection Log
Appendix E Action Level Exceedance Investigation Form

REVISION HISTORY

Add the effective date of the most-recent revision to the list below. Do not overwrite or delete any dates. This is intended to be a complete record of all revisions made to this plan.

Date of Initial Issuance
April 15, 2019
Revision Dates

1 INTRODUCTION

This Monitoring Action Plan (MAP) has been prepared in response to an Administrative Consent Order (ACO), as issued by the New Jersey Department of Environmental Protection (NJDEP) and executed on March 21, 2019. Item 7a of the Compliance Schedule in the ACO requires submittal of a MAP for the proposed hydrogen sulfide (H_2S) and odor monitoring system and specific actions that the owner will take to control and/or mitigate emissions of hydrogen sulfide and odors in order to maintain compliance with N.J.A.C 7:27-5.2(a) and 7.3, and N.J.A.C 726-2A.7(f)4.

The Keegan Sanitary Landfill (Landfill) is located at 437 Bergen Ave, Kearny, Hudson County, New Jersey. The Keegan SLF was re-opened in 2009 by the New Jersey Meadowlands Commission (NJMC). The NJMC later merged with the New Jersey Sports and Exposition Authority (NJSEA). The NJSEA is currently authorized to operate the solid waste landfill facility pursuant to a Certificate of Authority to Operate (Certificate No. CTO180001) issued by the NJDEP on November 14, 2018. The NJSEA currently contracts with Waste Management (WM) to operate the Landfill.

The Landfill is approximately 95 acres and accepts primarily construction and demolition waste. The Landfill is a single mound-type landfill, constructed atop a historical municipal solid waste (MSW) dumpsite. The Landfill began receiving construction and demolition (C&D) waste in 2009. The entire landfill footprint is surrounded by a bentonite-slurry cutoff wall, which includes a leachate collection system. Collected leachate is pretreated for hydrogen sulfide, prior to discharge to the local sewer system.

A freshwater marsh borders the Landfill on the northeast and east. Industrial facilities are located to the north and south of the Landfill. Industrial facilities also bound the site to the west, but quickly transition to residential properties.

2 MONITORING PLAN

The monitoring program at the Keegan Landfill will consist of fixed monitoring stations to measure hydrogen sulfide concentrations in the ambient air and daily site monitoring for objectionable odors.

Project Organization

Table 1 presents the responsibilities and contacts for the monitoring program:

Table 1. Project Organization

Responsibility	Name	Contact Number	Email address
Responsible Facility Representative	Tom Marturano, NJSEA Project Manager	201-460-4613	tmarturano@njsea.com
SCS Project Manager, Consultant	Lisa Wilkinson	845-357-1056	lwilkinson@scsengineers.com
Field Inspections	Angelo Urato Reggie Rachumi	201-638-7064	AURATO@njsea.com Rrachumi@njsea.com
Data Reporting	Emilcott	609-234-4311	cwu@emilcott.com
Equipment Maintenance	Emilcott	609-234-4311	cwu@emilcott.com
NJDEP Contact	Luis Lim	(609) 633-1151	Luis.Lim@dep.nj.gov

Fixed Monitoring Program

Monitoring Station Locations

In accordance with ACO Item7.b, eight (8) monitoring stations, spaced equally around the boundary of the landfill, are required to sample and analyze hydrogen sulfide concentrations in the ambient air. The monitors will operate twenty-four hours a day, seven days a week. These stations are identified in Table 2 below and their locations are shown in the site plan in Attachment A.

Table 2. Monitoring Station Locations

Monitoring Station	WIND DIRECTION
MS-1	North
MS-2	Northeast
MS-3	East
MS-4	Southeast
MS-5	South
MS-6	Southwest
MS-7	West
MS-8	Northwest

Due to the proximity of the Landfill to the wetlands to the north and east, the monitors on these sides will be placed on the outside edge of the perimeter road instead of at the property line.

Monitoring Station 1 (MS-1) is located to the north. There is a small inlet of water directly north at the midpoint of the Landfill, therefore, this station is locate slightly to the west, instead of the east, towards more sensitive receptors. MS-1 will be installed on the landfill side of the existing litter fence.

MS-2 is located to the northeast of the landfill and will be installed near an existing leachate pump station on the landfill side of the existing litter fence.

MS-3 is located to the east of the landfill and will be installed on the landfill side of the existing litter fence.

MS-4 is located near the southeast corner of the landfill and will be installed near an existing leachate pump station on the landfill side of the existing litter fence. MS-5 is located at the south of the landfill and will be installed at the site entrance. This monitoring station is slightly to the west to avoid interferences from truck traffic at the scales.

MS-6 is located to the southwest. This station is located approximately 75 feet on the Landfill side from the fenceline and approximately 100 feet from the landfill property line to avoid interferences from truck traffic on Bergen Avenue.

MS-7 is located to the west of the landfill. This station will be installed 10 feet from the existing combined open sanitary/stormwater ditch.

MS-8 is located to the northwest of the landfill. This station will be installed approximately 75 feet from the landfill toe of slope, on the outside limit of the existing perimeter stormwater swale.

Monitoring Station Equipment

The selection for the monitoring equipment is based on the minimum performance criteria set forth in the NJDEP regulations and other monitoring programs established in New Jersey.

Table 3. Specifications for Hydrogen Sulfide and Wind Speed/Direction Monitors

Equipment	Make and Model	Operating Range
H_2S Analyzer	Arizona Instrument, Jerome 631-X	3 ppb -- 50 ppm
Wind Direction	Vaisala WXT520	0-360°
Wind Speed	Vaisala WXT520	0 – 60 mph
Temperature Sensor	Vaisala WXT520	-60 to 140 °F
Humidity Sensor	Vaisala WXT520	0-100% RH
Precipitation Sensor	Vaisala WXT520	0 to 200 mm/hour
Barometric Pressure	Vaisala WXT520	600-1100 hPa
Data Logger	Vaisala WXT520	NA

The monitoring equipment will be housed in a weather-proof metal cabinet with an air intake approximately four to five feet above grade. All monitoring stations except MS-5 will be operated on solar power with battery backup. MS-5 will be connected to the onsite electrical system. The batteries are 110AH deep cycle batteries with 24-hour life per charge without solar power. Batteries will be charged through a gang style charger or with a vehicle and jumper cables. Battery power will be monitored in the station and low battery notifications will be sent to field personal.

Each cabinet will contain a remote terminal unit to store readings in a local database before wirelessly sending data via cellular telemetry to a cloud server.

Equipment Manufacturers cut sheets are provided in Attachment B. The Jerome Analyzer User Manual is provided in Attachment C.

Monitored Parameters

The proposed monitoring program will consist of semi-continuous monitoring of the following parameters:

- Hydrogen Sulfide (H_2S);
- Wind Speed (WS);
- Wind Direction (WD);
- Precipitation;
- Ambient Temperature (ATM);
- Humidity;
- Barometric Pressure.

MS-5 will house the main weather station that collects all the monitored parameters listed above. The other seven monitoring stations will include H_2S, wind speed and direction only.

The daily thirty-minute maximum average and time of maximum for H_2S as well as the 24-hour average at each monitoring location will be reported daily to the parties listed in Table 2, with the associated weather information from that day.

The station data logger receives output from the meteorological devices every minute. The Jerome H_2S meter pulls a sample and analyzes it every 5 minutes. Real-time and average readings are displayed on a web-based user interface.

Sample Handling Requirements

The air sample is automatically drawn into the H_2S analyzer's inlet by an internal sample pump. After the air sample is analyzed for H_2S, the sample air is exhausted. Air sampling frequency is every five minutes.

Analytical Method

The method for analyzing H_2S is electrochemical. In the analyzer, the air sample passes over a gold film for a precise time period. The gold film adsorbs the H_2S from the sample air, which causes an increase in electrical resistance in the gold film proportional to the mass of H_2S in the sample. The analyzer's internal electronics estimate the concentration of H_2S, and the value is displayed in parts per million (ppm) or parts per billion (ppb).

Quality Control

To ensure the quality of the data, the following quality control activities will be conducted.

Table 4. Quality Control Activities

ACTIVITY	FREQUENCY	ACTION
Data Completeness	85% valid hours per monitoring station per week	Repair or replace monitor
Zero Check	Monthly or as needed	Perform warm-up
Regeneration	Quarterly or as needed	Perform regeneration
Factory Calibration	Annual	Return to factory
Analyzer Audit	Upon Request by NJDEP	Functioning Test Module

During factory calibration, the monitoring station will be taken offline and the equipment sent to the manufacturer. NJDEP will be notified 1 week prior to the equipment swap. Extra Jerome units will be available for use when one is sent off for yearly calibration to allow for continuous readings at all points.

All calibration and verification documents will be kept on-site for a minimum of two years.

Instrument Maintenance

The following maintenance schedule will be implemented. A record of maintenance activity will be kept and will be made available to the NJDEP when requested.

Table 5. Maintenance Schedule

PART/COMPONENT	MAINTENANCE CYCLE
Charge battery	NA
Change 0.25 inch fritware filter	as needed
Change internal filters and tubing	as needed
Replace zero air filter	Annually
Functional check	as needed
Replace battery	NA

Performance Assessment

A performance audit on the H_2S analyzer will be conducted annually. The goal of the audit is to meet $\pm$10% difference at the concentration of the Low Level Functional Test Module of 30 ppb. The result of the audit will be submitted to NJDEP. NJDEP may also request that an audit be conducted at any time.

Monitoring Frequency

Per the AOC, the monitors shall run twenty-four hours per day seven days a week and shall meet the requirements set forth in N.J.A.C 7:26-2A.7(h)10ii and 2A.8(h)12.

The data recorder will collect data every five minutes and the data is stored by a computer-based system using wireless telemetry to relay the field measurements in real-time, to a dedicated cloud database server.

Data Management and Reporting

Since the data is saved in a cloud-based server, all of the data will be readily available upon request. Daily emails will be sent to the parties in Table 2 each day summarizing the maximum 30-minute average, the time of the maximum 30-minute average and the 24-hour average for H_2S at each station and including the corresponding weather data for that period.

A quarterly summary report of all of the data will be provided to the Chief, Bureau of Air Monitoring, NJDEP. The quarterly report will include the maximum daily readings, exceedances of action levels, actions taken, summaries of data completeness, zero check results, regeneration results and factory calibrations (if conducted) for each monitoring station. The report will also discuss data anomalies or false positives.

Action Levels

Per N.J.A.C 7:27-5.2(a) and 7.3 and N.J.A.C 7:26-2A.7(f)4, the action Level for hydrogen sulfide is:

1. Ambient Air Concentration (30 minutes) $\geq$ 30 ppb

NJSEA shall immediately notify the Department at 1-877-WARNDEP if the H_2S concentrations are equal to or greater than 30 ppbv (see N.J.A.C. 7:27-7.3) at any of the eight monitoring stations. However, as noted above, the monitoring stations on the north and east of the Landfill will be at the Landfill perimeter, not the property's fenceline. This may result in exceedances of the action level that are not exceedances at the property line.

Daily Odor Inspection Program

Compliance with N.J.A.C 7:27-5.2(a) and 7.3, will also be met with a daily odor inspection program. During each day of operation (Monday through Friday, except holidays) a designated employee will perform an inspection of the Landfill perimeter road and perimeter of the top plateau to determine whether any odorous gases are being released. These daily inspections will be conducted promptly after the Landfill opens Monday through Friday and a second time on Fridays shortly before the Landfill closes and at other times during the day, when deemed necessary (i.e, during changing weather conditions, modification to waste filling activities).

Daily inspections should include thorough visual inspections to identify areas of gas release or objectionable odors, typically identified by indicators such as staining or vegetation stress. A form to document the Landfill Inspection is provided in Appendix D.

Data Management and Reporting

A weekly summary of identified areas of gas release or significant odor along with the mitigation measures taken and their effectiveness will be provided to NJDEP via email until such time that NJDEP and NJSEA agree this is no longer needed or a period of 2 months has passed without any off-site odors from the facility.

Future Program Modifications

NJSEA will periodically evaluate the data from each monitoring location to determine if all or some of the eight monitoring points are still necessary, should be relocated, or reporting frequency can be decreased once remediation systems are in place. Modifications will not be made to the monitoring system operations until approval by the NJDEP.

3 ACTION PLAN

Upon receipt of a daily email indicating the ambient air concentration exceeded 30 ppb over a 30-minute period, the following actions will be taken:

1. Contact the NJDEP Hotline at 1-877-927-6337 immediately.

2. Within 30 minutes of the email and notification to the NJDEP, Site personnel will be deployed to inspect the area surrounding the monitoring station with the exceedance. Site personnel will document the following items on a field form provided in Appendix E.
    - Observations to estimate if the odor is persisting and attempt to identify area of gas release (e.g., leachate seeps, open pipes, waste loads, cracks in cover soils, etc.).
    - Verify operation of the monitoring equipment and wind direction at the time of odor.
    - Site personnel will inspect and document landfill operations at time of exceedance (e.g., equipment operating, waste loads, active fill area, etc.).
    - If wind direction from opposite direction from landfill, site personnel will look for other potential off-site odor sources.

3. If the equipment does not appear to be functioning properly, Emilcott will send personnel with one (1) business day to verify equipment operation.

4. If the Action level continues to be exceeded, one or more of the Odor Mitigation Activities listed below will be taken, depending on applicability.

In response to observation of an objectionable odor detected during the daily inspection, one or more of the Odor Mitigation Activities listed below will be implemented. The effectiveness of the remedial actions taken will be recorded on the inspection log to document the change in odors detected. The affected area will be revisited at the end of that business day or at the beginning the next day.

Odor Mitigation Activities

Interim Cover Improvements

If areas of potential emission pathways, such as erosion, moisture, or exposed waste, are discovered during the site inspection, additional cover material will be placed on the identified area. The areas where additional cover material is placed shall also be inspected for 5 days after placement to insure the new fill is sufficient to address odors. Adequate amounts of cover soils or mulch material will be stockpiled onsite to facilitate a timely response to cover repairs.

Odor Neutralizing Agents

Odor masking or neutralizing agents can be a temporary mitigation measure prior to the installation and operation of a gas collection and control system. NSJEA will investigate the most appropriate agent to have on site to mitigate H_2S odors.

Long-term Actions

Gas Collection and Control System

NJSEA has committed to design, installation and operation of a gas collection and control system (GCCS). The GCCS would collect landfill gas from a number of vertical extraction wells and horizontal collectors strategically placed throughout the waste mass to target areas of odorous gas production. An appropriately sized blower and flare skid will be incorporated into the GCCS design. LFG modeling will be used to help determine the necessary specifications for the flare as required by Item 7.e of the ACO. All gas collected from the Landfill will then be combusted in a flare. The system will be expanded incrementally to account for additional waste filling.

Appendix A

Monitoring Station Location Plan

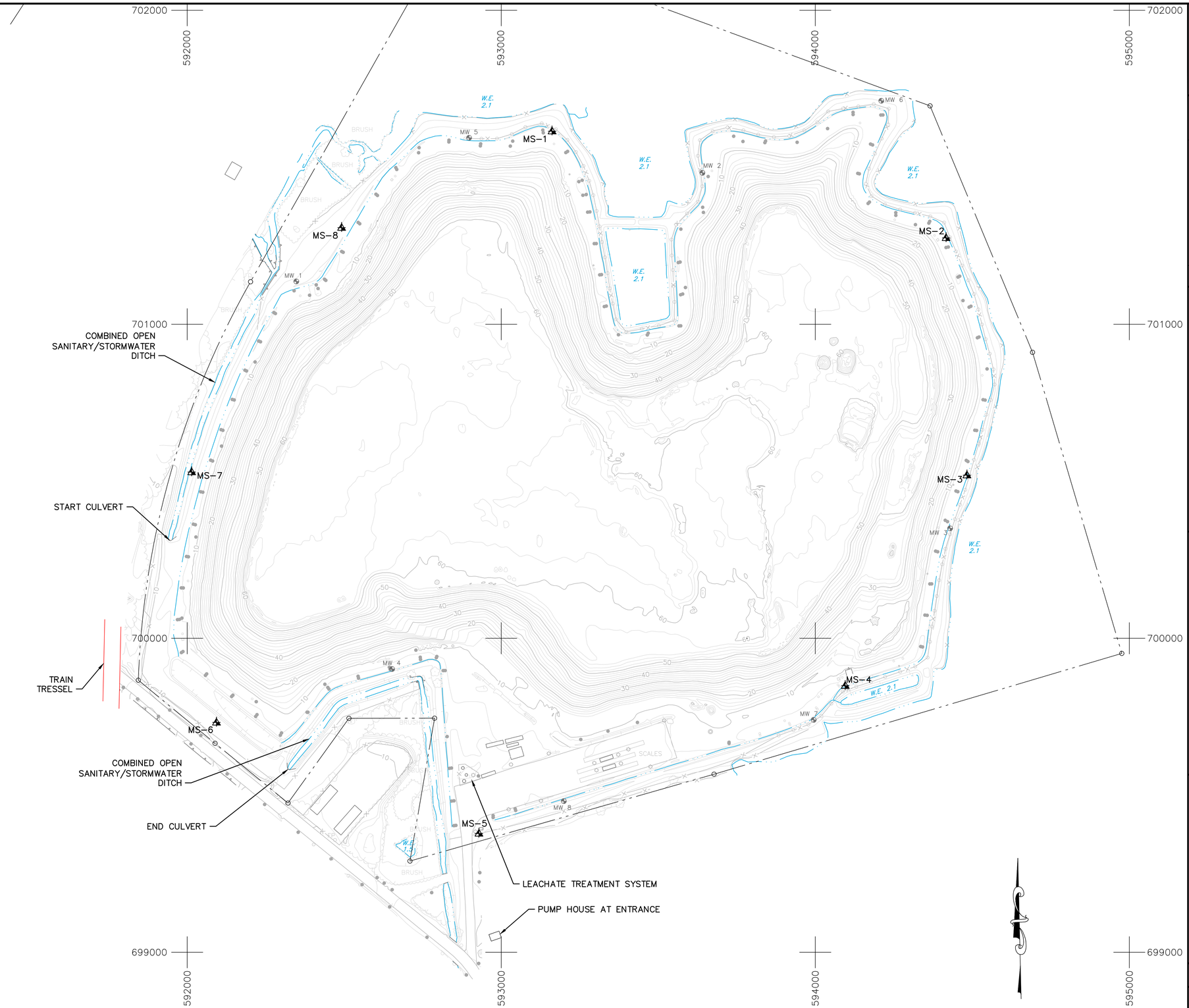

LEGEND:

- PROPERTY LINE
- 30 EXISTING CONTOUR
- VEGETATION LINE
- MW GROUND WATER MONITORING WELL
- MS-4 MONITORING STATION

REFERENCES:

1. FEATURES DEPICTED BASED ON DRAWING ENTITLED "EXISTING TOPOGRAPHY, KEEGAN LANDFILL" DATE OF AERIAL FLIGHT IS 03-17-18, PREPARED BY KUCERA INTERNATIONAL INC., DATED 3-17-18. (FILENAME: KEEGAN 2018 REVISED.DWG FILE DATE 5-24-2018)
2. BOUNDARY DEPICTED WAS TAKEN FROM BEST AVAILABLE SOURCES. ALL BEARINGS AND DISTANCES SHOWN WERE DERIVED FROM OR CALCULATED FROM DATA FURNISHED KUCERA INTERNATIONAL BY NJSEA AND SHOULD NOT BE USED AS THE LEGAL BOUNDARY OF RECORD.
3. COORDINATE AND ELEVATION DATA FOR MONITORING WELLS WERE PROVIDED BY NJSEA.

NO.	REVISION	DATE
0	FINAL PLAN	4/15/2019

SHEET TITLE: MONITORING STATION LOCATION PLAN

PROJECT TITLE: MONITORING ACTION PLAN KEEGAN LANDFILL

CLIENT: NEW JERSEY SPORTS & EXHIBITION AUTHORITY
1 DE KORTE PARK PLAZA, POB 640
LYNDHURST, NJ 07071

SCS ENGINEERS
STEARNS, CONRAD AND SCHMIDT CONSULTING ENGINEERS, INC.
4 CHERYL LYNN BLVD. SUITE 100 SPEFRN, NY 10901
PH. (845) 357-1510 FAX. (845) 357-1049

PROJ. NO. 01219702.00
DSN. BY: LKW
DWN. BY: SHY
CHK. BY: LKW
Q/A RVW BY: LKW
APP. BY: LKW

CADD FILE: MONITORING SP

DATE: 4/15/2019

SCALE: AS SHOWN

DRAWING NO. 1 of 1

I:\PROJECTS\01219702.00\DRAWINGS\MONITORING SP.DWG layout: SP plotted on: 4/15/2019 4:15 PM Yevchak, Sharon

Appendix B

Equipment Cut Sheets

1.800.528.7411

rac Jerome Applications Support About Us Contact

Jerome® 631-X

Gold Film Hydrogen Sulfide Analyzer

The portable Jerome® 631-X Hydrogen Sulfide Analyzer displays low-level concentrations in just seconds. It offers an analysis range

of 0.003-50 ppm for odor and corrosion control, safety, and leak detection in such industries as wastewater treatment, oil and gas, pulp and paper, and farming. This simple-to-use instrument utilizes an internal rechargeable battery pack or AC power, and is easily carried to suspected sources of hydrogen sulfide for detection and measurement. Locked in survey mode, the 631-X automatically displays hydrogen sulfide concentrations as quickly as every 3 seconds.

Contact us for more information

Ultra Sensitive

Detect hydrogen sulfide in air at levels as low as 3 parts per billion (3ppb).

Rugged

Its sturdy metal housing makes the 631-X tough enough for nearly any environment.

Proven

The Jerome's gold film sensing technology has been validated in the laboratory and in the field for more than 35 years.

Simple to Operate

Get an accurate hydrogen sulfide reading at the touch of a button.

Data Logging

The available data logger module can store up to 1,000 measurements.

Specifications

Detection Range:	0.003 ppm to 50 ppm
Resolution:	0.001 ppm *range dependent

Accuracy:	±0.003 ppm at 0.05 ppm ±0.03 ppm at 0.5 ppm ±0.3 ppm at 5 ppm ±2 ppm at 25 ppm
Response Time:	Survey Mode: 3-20 seconds Sample Mode: 12-30 seconds
Flow Rate:	150 ± 10 mL/min
Result Units:	ppm
Optional Integrated Data Storage:	1,000 test results; retains date and time
Optional Autosample Mode:	Intervals between 1 and 60 minutes
Display:	Backlit LCD
Battery:	Rechargeable NiCad 6 hour life, charges in 14 hours
Power Requirements:	100-120 VAC, 50/60 Hz, 1A or 220-240 VAC, 50/60 Hz, 1A
Fuse:	F1A 250 V, 5 mm x 20 mm
Operating Environment:	0°C to 40°C, non-condensing, non-explosive
Output:	RS-232 Serial Port Analog: 4-20 mA passive current loop

Dimensions:	Standard: 13″ L x 6″ W x 4″ H (33 cm L x 15 cm W x 10 cm H) XE Model: 14″ L x 7″ W x 7″ H (35 cm L x 18 cm W x 18 cm H)
Weight:	Standard: 7 lbs. (3.18 kg) XE Model: 8 lbs. (3.5 kg)
Warranty:	1 year, factory parts and labor
Certifications:	CE (220-240 VAC, 631-XE model only)

Download the Jerome 631-X Manual

Features

Low-Level Detection: The Jerome® 631-X can detect H_2S in air from 0.003 ppm to 50 ppm, making it ideal for regulatory compliance and odor control monitoring, scrubber efficiency testing, monitoring corrosion in control rooms, and more.

Gold Film Sensor: Validated in the field and in the lab for over 35 years, our proprietary gold film sensor ensures repeatable results across a wide range of applications.

Rugged Construction: Housed in a sturdy metal case, the 631-X is built to withstand rough operating conditions and deliver accurate results whether it is in the field or in the lab.

Easy to Use: The quick reference guide beneath the handle helps simplify day to day use and the easy to read display screen is equipped with an automatic backlight that activates in low-light situations.

Regulatory Compliance: The 631-X is in active use by many regulatory agencies and landfill, water treatment and waste management facilities across the world.

Survey Mode: The 631-X features a survey mode that allows the user to continuously draw in samples of air in order to sweep an area for hydrogen sulfide hot spots and enable corrective action to be taken.

Optional Data Logging: When equipped with data logging capabilities, the 631-X can store data for up to 1,000 samples, including date and time.

Optional Autosample Mode: The 631-X offers an optional autosample mode that can be programmed to take a sample at various intervals between 1 and 60 minutes.

Field Regeneration: Sensor regeneration for the 631-X can be performed in the field using the optional Power Inverter Kit, allowing for extended on-location testing.

Accessories

Part Number	Description
1400 0052	Soft-Sided Field Carrying Case
1400 2002	Probe
6000 1055	Cable Assembly, JCI/JCS Interface
6100 0010	Data Logger
990-0183	Ammonia Filter
990-0225	10:1 Dilution Model
Y411 0904	Hard-Sided Carrying Case Assembly

Y631 0901	Accessory Kit
Y631 0905	Maintenance Kit
Y990-0257	Jerome Communication Software Kit (Windows 7/8)
Y990-0259	Jerome Communication Software Data Logger Kit (Windows 7/8)
Z2600 0918	Jerome® Functional Test Module, 250 ppb, 115V
Z2600 0930	Jerome® Functional Test Module, 30 ppb, 115V
Z2600 3905	Zero Air Filter
Z2600 3940	Chlorine Filter

Parts & Consumables

Part Number	Description
2300 0001	Trimmer Tool
2600 3039	Pack of 20 Fritware, .25 cm diameter
6000 4003	Line Cord, 115 VAC
PS-151	Tube Nut
Y2600 3945	Straight Intake Kit
Z2600 3930	Scrubber Filter

Z2600 3933	Scrubber Filter, LFS
Z2600 3934	Scrubber Filter, LFD
Z4000 0907	Battery Pack Assembly X431/X631

Copyright © 2019 · AMETEK Arizona Instrument · All Rights Reserved · Sitemap · Privacy Policy · Terms and Conditions

VAISALA

www.vaisala.com

Vaisala Weather Transmitter WXT520 Access to Real Time Weather Data

The WXT520 has an automatic control circuit that switches the heating on at low temperatures.

Features/Benefits

- Measures 6 most essential weather parameters
- Applications: weather stations, dense networks, harbors, marinas
- Low power consumption – works also with solar panels
- Compact, light-weight
- Easy to install with one-bolt mounting method
- No moving parts
- Heating available
- Vaisala Configuration Tool for pc
- USB connection
- IP66 housing with mounting kit

WXT520

The Vaisala Weather Transmitter WXT520 measures barometric pressure, humidity, precipitation, temperature, and wind speed and direction.

To measure wind speed and direction, the WXT520 has the Vaisala WINDCAP® Sensor that uses ultrasound to determine horizontal wind speed and direction.
The array of three equally spaced transducers on a horizontal plane is a Vaisala specific design. Barometric pressure, temperature, and humidity measurements are combined in the PTU module using capacitive measurement for each parameter. It is easy to change the module without any contact with the sensors.

The WXT520 is immune to flooding clogging, wetting, and evaporation losses in the rain measurement.

Measuring Acoustic Precipitation

The WXT520 precipitation measurement is based on the unique Vaisala RAINCAP® Sensor, which detects the impact of individual rain drops. The signals exerting from the impacts are proportional to the volume of the drops.

Hence, the signal from each drop can be converted directly to the accumulated rainfall.

The WXT520 measures accumulated rainfall, rain intensity and duration of the rain – all in real time.

The Vaisala RAINCAP® Sensor is the only maintenance-free precipitation sensor on the market.

Dimensions

Dimensions in mm (inches)

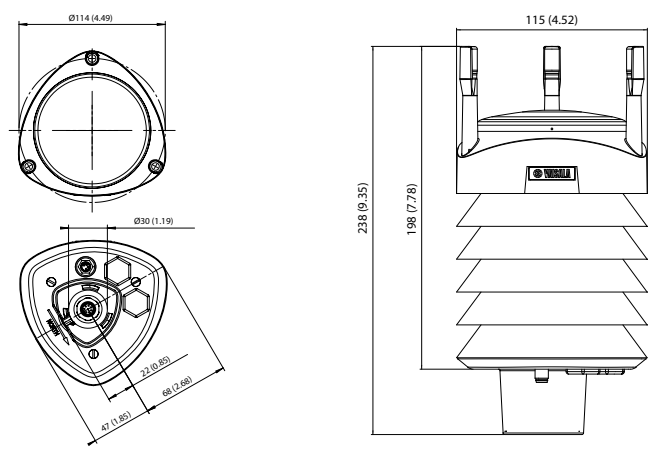

Technical Data

Wind

SPEED	
range	0 ... 60 m/s
response time	250 ms
accuracy	±3% at 10m/s
output resolutions and units	0.1 m/s, 0.1km/h, 0.1 mph, 0.1 knots
DIRECTION	
azimuth	0 ... 360°
response time	250 ms
accuracy	±3°
output resolution and unit	1°

Liquid Precipitation

RAINFALL	cumulative accumulation after the latest automatic or manual reset
output resolutions and units	0.01 mm, 0.001 inches
accuracy	5%*
RAINFALL DURATION	counting each ten-second increment whenever water droplet is detected
output resolution and unit	10 s
RAIN INTENSITY	one-minute running average in ten-second steps
range	0 ... 200 mm/h (broader range with reduced accuracy)
output resolutions and units	0.1 mm/h, 0.01 inches/h
HAIL	cumulative amount of hits against the collecting surface
output resolutions and units	0.1 hits/cm^2, 0.01 hits/in^2, 1 hits
HAIL DURATION	counting each ten-second increment whenever hailstone is detected
output resolution and unit	10 s
HAIL INTENSITY	one-minute running average in ten-second steps
output resolutions and units	0.1 hits/cm^{2}h, 1 hits/in^{2}h, 1 hits/h

* Due to the nature of the phenomenon, deviations caused by spatial variations may exist in precipitation readings, especially in a short time scale. The accuracy specification does not include possible wind induced errors.

Air Temperature

Range	-52 ... +60 °C (-60 ... +140 °F)
Accuracy for sensor at +20 °C	±0.3 °C (±0.5 °F)
Accuracy over temperature range (see graph below)	

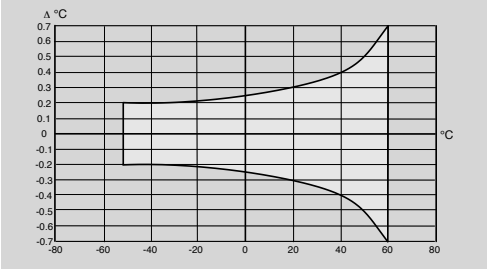

Output resolutions and units	0.1 °C, 0.1 °F

Barometric Pressure

Range	600 ... 1100 hPa
Accuracy	±0.5 hPa at 0 ... +30 °C (+32 ... +86 °F) ±1 hPa at -52 ... +60 °C (-60 ... +140 °F)
Output resolutions and units	0.1 hPa, 10 Pa, 0.0001 bar, 0.1 mmHg, 0.01 inHg

Relative Humidity

Range	0 ... 100 %RH
Accuracy	±3 %RH within 0 ... 90 %RH ±5 %RH within 90 ... 100 %RH
Output resolution and unit	0.1 %RH

General

Operating temperature	-52 ... +60 °C (-60 ... +140 °F)
Storage temperature	-60 ... +70 °C (-76 ... +158 °F)
Operating voltage	5 ... 32 VDC
Typical power consumption	3 mA at 12 VDC (with defaults)
Heating voltage	5 ... 32 VDC / 5 ... 30 VAC_{RMS})
Serial data interface	SDI-12, RS-232, RS-485, RS-422, USB connection,
Weight	650 g (1.43 lb)
Housing	IP65
Housing with mounting kit	IP66

Electromagnetic Compatibility

Complies with EMC standard EN61326-1; Industrial Environment	
IEC standards	IEC 60945/61000-4-2 ... 61000-4-6

VAISALA

Please contact us at
www.vaisala.com/requestinfo

www.vaisala.com

Scan the code for more information

Ref. B210417EN-J ©Vaisala 2012
This material is subject to copyright protection, with all copyrights retained by Vaisala and its individual partners. All rights reserved. Any logos and/or product names are trademarks of Vaisala or its individual partners. The reproduction, transfer, distribution or storage of information contained in this brochure in any form without the prior written consent of Vaisala is strictly prohibited. All specifications — technical included — are subject to change without notice.

Appendix C

Jerome 631-X Analyzer User Manual

USER MANUAL

JEROME® 631-X
HYDROGEN SULFIDE ANALYZER
OPERATION MANUAL

September 2017

ARIZONA INSTRUMENT LLC
3375 N Delaware Street | Chandler, AZ 85225 USA
800.528.7411 | 602.470.1414 | f 602.281.1745

www.azic.com

Email:
General – azi@azic.com
International – intl@azic.com
Customer Service – support@azic.com

JEROME® 631-X

Hydrogen Sulfide Analyzer

Operation Manual

PROPRIETARY RIGHTS NOTICE

This manual contains valuable information and material developed by Arizona Instrument LLC for use with the Jerome® 631-X Hydrogen Sulfide Analyzer. No part of this manual can be reproduced or transmitted in any form or by any means, electronic, mechanical or otherwise. This includes photocopying and recording or in connection with any information storage or retrieval system without the express written permission of Arizona Instrument LLC.

ALL RIGHTS RESERVED

© Copyright 1990-2017, Arizona Instrument LLC

Acrodisc® is a registered trademark of Pall Gelman Sciences, Inc.
Resisorb® is a registered trademark of Avantor Performance Materials.
AddSorb® is a registered trademark of Jacobi Carbons.
Tygon® is a registered trademark of Saint-Gobain Performance Plastics Corporation.
Windows® is a registered trademark of Microsoft Corporation in the United States and other countries.

Table of Contents

1. FOR THOSE WHO CAN'T READ THE WHOLE MANUAL NOW 4
2. INTRODUCTION 6
3. PRINCIPLE OF OPERATION 7
Zero Air Filter 8
Gas Flow Schematics 8
4. INSTRUMENT OPERATION 10
LCD Codes 10
Daily Operations 11
Sensor Regeneration 12
Zero Adjust 13
Sample Mode 14
Survey Mode 15
Operating on AC Power or Generator 16
Operating on Internal Battery Power 16
External battery power 16
Charging Batteries 17
Obtaining Maximum Battery Life 17
5. MAINTENANCE 18
Preventive Maintenance Calendar 18
Flow System 19
0.25 inch Fritware Filter 19
Internal Filters 20
Replacing the Battery Pack 21
Setting the Input Voltage 21
Changing the Fuse 22
6. CALIBRATION 23
Verification of Functionality and Quality Control 23
7. 631-X TROUBLESHOOTING 24
8. JEROME® 631-X TECHNICAL SPECIFICATIONS 27
Optional Communications Capability 28
Instrument I/O Interface 28
Potential Interferences 29
9. ACCESSORIES & MAINTENANCE PARTS 30
Spare Parts 32
10. FACTORY CALIBRATION SERVICE 35
11. APPENDIX A - 631-X FUNCTIONAL TEST MODULE 36
Simple Operation 36
12. APPENDIX B - JEROME® COMMUNICATIONS SOFTWARE 37
JCS Kit Contents 38
System Requirements 38
Data Logger Option 38
13. APPENDIX C - INTERNAL DIP SWITCH SETTINGS 39
DIP Switch Settings: 39
14. APPENDIX D - JEROME® 631-X OPTION FUNCTIONALITY 40
Auto-Zero 40
Instrument Zeroing 41
Timed Regeneration 42
Auto-Sample 42
4-20 mA Analog Output 43
Connection and Setup: 44
Fresh Air Solenoid 46
DC Power Operation 47
DC Power Adaptor Kit, AZI P/N Y031 0902 47
15. WARRANTY 49

An up-to-date electronic copy of this manual can be found at:
http://www.azic.com/downloads.aspx

1. FOR THOSE WHO CAN'T READ THE WHOLE MANUAL NOW

This manual contains details that will optimize the results and the life of your instrument. Read and refer to the manual for complete details on operation, maintenance and troubleshooting, special voltage inputs and data output.

The Jerome® 631-X is easy to operate and ready for use upon receipt from the factory.

- Remove the instrument from the packing material.

Retain all packaging materials for any future shipment of the instrument.
If the instrument is returned to AZI for any reason, it must be placed in the original packaging materials that have been tested and proven to be effective protection during shipment.

- Call AZI Customer Service at 800-528-7411 or 602-470-1414 for Return Material Authorization (RMA) information prior to returning a unit.
- For all shipments, boxes and packing materials are available from AZI.
- Pack the Jerome® instrument only in a Jerome® shipping container.

AZI WILL NOT BE RESPONSIBLE FOR SHIPPING DAMAGE.
IF YOU RETURN THE INSTRUMENT IMPROPERLY PACKAGED OR SHIPPED,
YOU SHOULD INSURE IT FOR FULL VALUE.

- Check for any damage and confirm receipt of all parts on your packing list. Contact Arizona Instrument Customer Service at (800) 528-7411 or (602) 470-1414 if you have any questions.
- Press the ON button. The display should read 000 in less than one second.
  - A LO BAT message appears briefly in the upper left corner.
  - If the LO BAT light persists, recharge the battery. See page 17.

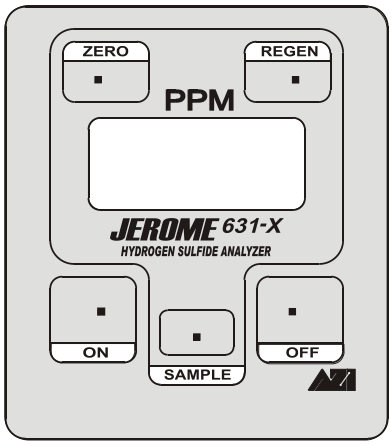

- Check the voltage setting (110 or 220 VAC) on the back of the instrument. Ensure that it is set to the correct voltage. If the pointer is not aligned to the local voltage, turn the selector to point to the correct voltage.

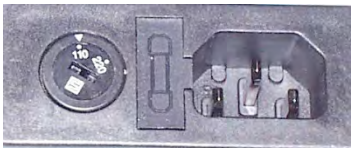

- Perform a sensor regeneration by following these steps:
  - Connect the line cord between the connector on the back of the 631-X and an AC power outlet.
  - Press the ON switch and then press the REGEN button.
    - The instrument will begin a 10 minute regeneration cycle, indicated by .H.H.H flashing on the display. **Do not interrupt this cycle.** For a complete description of this process, see page 12.
    - If any error message, such as .P.P.P, appears on the display, see the "Troubleshooting" section beginning on page 24.
- When regeneration is complete, zero the sensor by pressing the ZERO button and turning the zero adjust screw, located under the handle, until the display reads 0.
- The instrument is now ready to sample.
- To ensure the input to the instrument contains no hydrogen sulfide or mercaptans, use a Zero Air Filter, AZI P/N Z2600 3905. The Zero Air Filter cleans the air sample and should produce sample readings of less than 0.003 ppm. Therefore, use the filter to:
  - Equilibrate the instrument to temperatures that are higher or lower than the instrument. Sample with filter installed until the reading is below 0.003 ppm.
  - Identify contamination within the unit.
  - Confirm the presence of hydrogen sulfide when readings are elevated. Install filter and verify that the readings go down with filter installed.
- When the instrument measures hydrogen sulfide, the zero display will be replaced with a value.

CAUTION

Do not adjust the ZERO after the instrument has measured hydrogen sulfide or before the next regeneration. (Occasionally the display may drop to .L.L.L (indicating low) between the initial zeroing and the first sample. It is OK to readjust the ZERO if the instrument has not measured hydrogen sulfide.)

- The instrument is designed for ambient air monitoring. **DO NOT allow the probe or the instrument's intake to be exposed to any liquid.**
- The instrument is not explosion proof.
- Press the SAMPLE button to start a 10 second sampling cycle.
- Perform sensor regeneration after each day's testing.
- Perform another sensor regeneration and re-zero the instrument before each day's use.
- Perform sensor regeneration after 30 days of storage or inactivity.

Note: There are two different versions of the 631-X, and they can be distinguished by a small 'SMV' label located above the serial label on the back of the instrument. In this manual, when it is necessary to distinguish between the two versions, they are referred to as 'SMV' instruments or 'Non-SMV' instruments. Check for the 'SMV' label on your instrument to determine which steps apply to your instrument. 'SMV' instruments can be purchased with the Option Functionality and/or the Data Logger Functionality if desired.

Call AZI Customer Service, at (800) 528-7411 from the United States and Canada or (602) 470-1414 if you have any questions. If you prefer, you may send e-mail to support@azic.com

2. INTRODUCTION

The Jerome® 631-X Hydrogen Sulfide Analyzer is an ambient air analyzer with a range of 0.003 ppm to 50 ppm (parts per million).

CAUTION:

The Jerome® 631-X is for vapor use only.
DO NOT allow the probe or the instrument's intake to be exposed to any liquid, dust or other foreign material.

The 631-X is designed to be easy to operate for quick and accurate analysis of hydrogen sulfide vapor levels. It has few maintenance requirements. However, please take a moment to read this manual before attempting operation. If you have any questions about your application or operation, please call AZI Customer Service at (800) 528-7411 or (602) 470-1414 or e-mail support@azic.com for assistance.

631-X Features

- Accurate analysis of hydrogen sulfide in seconds
- Wide detection range allows multiple applications
- Survey mode for rapid source detection of hydrogen sulfide concentrations
- Rechargeable internal battery pack for portability
- Automatic backlight for LCD during low light conditions
- Microprocessor ensures a linear response throughout the entire range of the sensor
- Inherently stable gold film sensor

Optional Accessories

- Data Logger to record field monitoring information
- Jerome® Communication Software (JCS) Kit for unattended fixed-point sampling and downloading information from the Data Logger to a computer.
- Option Functionality (factory installed option) for external fresh air solenoid support, auto-zeroing, DC power operation, timed regeneration, 4-20 mA or 0-2 V analog output, and timed sampling
- Functional Test Module (FTM) (P/N Z2600 0918 or Z2600 0930) and Accessory Kit (Y2600 0920), for field verification of instrument functionality.
- Field Carrying Cases, hard sided P/N Y411 0904 or soft P/N 1400 0052, for versatile handling and additional storage
- Maintenance Kit, P/N Y631 0905 for routine maintenance and upkeep

Applications

- Ambient air analysis
- Odor nuisance monitoring
- Regulatory compliance
- Control room corrosion monitoring
- Quality assurance and quality control
- Scrubber efficiency testing
- Accuracy check for other hydrogen sulfide monitors and control systems
- Hydrogen sulfide source detection
- Leak detection
- Portable hydrogen sulfide detection

The Jerome® 631-X can be operated from 100-120 or 200-240 VAC. To change the default voltage range, refer to "Setting the Input Voltage" on page 21.

3. PRINCIPLE OF OPERATION

A thin gold film, in the presence of hydrogen sulfide, undergoes an increase in electrical resistance proportional to the mass of hydrogen sulfide in the sample.

When the SAMPLE button is pressed, an internal pump pulls ambient air over the gold film sensor for a precise period. The sensor absorbs the hydrogen sulfide. The instrument determines the amount absorbed and displays the measured concentration of hydrogen sulfide in ppm. During normal sampling, the ambient air sample is diluted in the flow system at a ratio of 100:1. When sampling in Range 0, (where low levels of hydrogen sulfide are expected) undiluted air samples are drawn across the gold film sensor.

The instrument's microprocessor automatically re-zeroes the digital meter at the start of each sample cycle and freezes the meter reading until the next sample cycle is activated, thus eliminating drift between samples.

During the sample mode cycle, bars on the LCD represent the percentage of sensor saturation. Depending on the concentrations, 50 to 500 samples may be taken before the sensor reaches saturation. At that point, a 10-minute heat cycle must be initiated to remove the accumulated hydrogen sulfide from the sensor. During the sensor regeneration cycle, both solenoids are closed to cause air to pass through a scrubber filter and provide clean air for the regeneration process. The flow system's final scrubber filter prevents contamination of the environment.

The heat generated during the regeneration may cause some low level thermal drift. To ensure maximum sample accuracy, wait 30 minutes after regeneration before zeroing and using the instrument.

Zero Air Filter

The Zero Air Filter removes mercury vapor, mercaptans, and hydrogen sulfide from the air sample. Readings with the filter installed should be near zero.

Because air that is cooler than the instrument will cause low readings and warmer air will cause higher readings, the Zero Air Filter should be used to equilibrate the unit to ambient air temperature. Continuous sampling with clean air will not cause saturation of the gold film sensor but will equalize temperatures faster to allow accurate analysis to begin sooner. For best results, be sure that the instrument is at the same temperature as the environment before testing.

The Zero Air Filter can also be used to identify contamination within the instrument. If the readings do not reduce to near zero with the filter installed, contamination should be suspected. If the readings do drop to near zero with the filter installed but elevate with the filter removed, the presence of hydrogen sulfide at the sampled location is confirmed.

For more information on the use of the Zero Air Filter, contact customer service at 1-800-528-7411, 1-602-470-1414, or visit our web site at http://www.azic.com.

Gas Flow Schematics

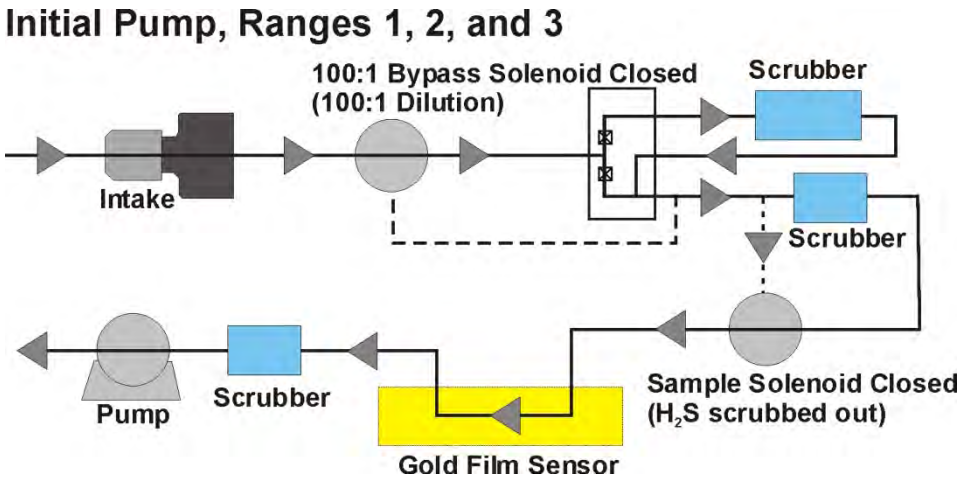

Sample Period, Ranges 1, 2, and 3

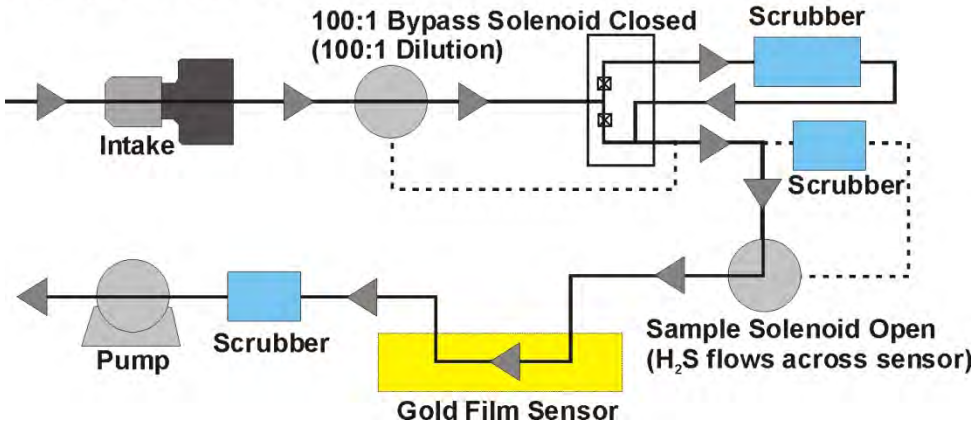

Initial Pump, Ranges 0

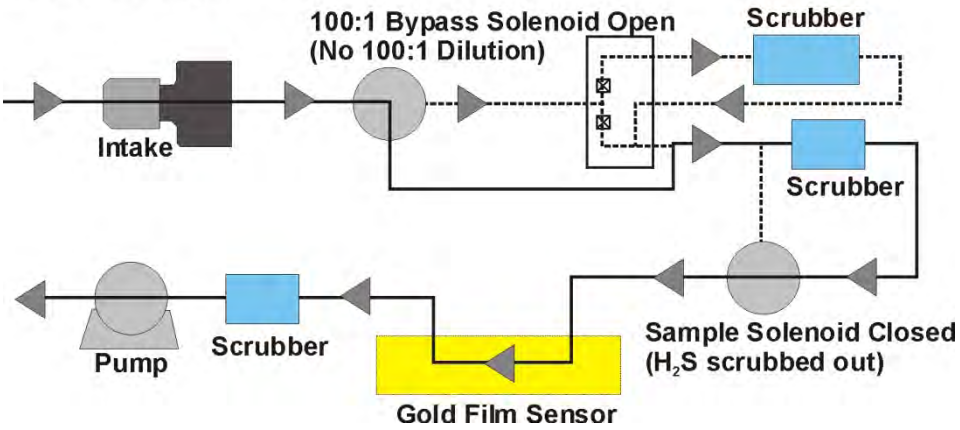

Sample Period, Ranges 0

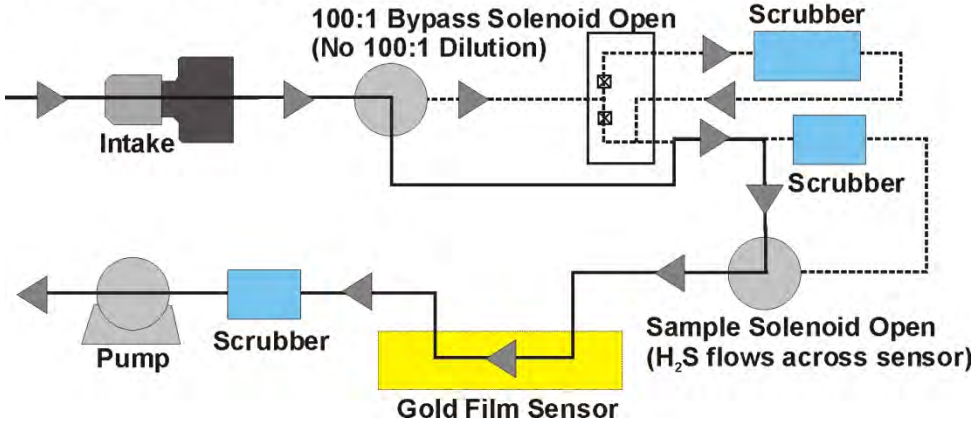

4. INSTRUMENT OPERATION

LCD Codes

LCD CODE	EXPLANATION
000	Ready to sample
.000	No hydrogen sulfide reading
.8.8.8	Sensor saturated-regeneration needed (refer to page 12)
.H.H.H	Sensor regeneration in progress (.H.H.H flashes)
.L.L.L	Re-zero needed (refer to page 13)
.P.P.P	Power cord required or low line power, <100 VAC (or 200 VAC) (see pages 16 and 17, Changing the Fuse, if .P.P.P remains on after the cord is connected.)
.LO BAT	Recharge batteries (refer to page 17)
.E.E.E	Same as LO BAT, automatically shuts off
.HL	Very high concentration has been detected. Refer to your safety policy for additional direction to confirm the concentrations."
DURING SAMPLING	
.-	0-25% sensor saturation
.--	25-50% sensor saturation
.---	50-75% sensor saturation
-.---	75-100% sensor saturation
DURING SAMPLING, USING SURVEY MODE	
-	Survey sampling (minus sign flashes continuously)
WHEN ZERO IS DEPRESSED	**Adjust to 0 <u>only</u> after sensor regeneration. It is normal for the display to read H after sampling has started.**
0	Zero, ready to sample
H	High, turn Zero potentiometer counterclockwise
L	Low, turn Zero potentiometer clockwise

Daily Operations

Before each day's use of the Jerome® 631-X, perform the following steps to verify proper instrument operation:

- Press the power ON button.
  - The digital meter displays 000.
    - (Disregard the digital meter's initial momentary reading.)
    - Recharge or replace the battery pack if the LO BAT indicator REMAINS ON. Refer to "Charging Batteries" on page 17 and/or "Replacing the Battery Pack" on page 21.
    - To ensure the instrument's electronics have stabilized, allow a 1-minute warm up before beginning the next step.
- Use the Zero Air Filter to equilibrate the instrument to ambient air temperature.
  - Install the Zero Air Filter in the instrument's intake.
  - Sample continuously until the readings stabilize.

- Perform sensor regeneration. Refer to page 12 for the procedure.

- Thirty minutes after sensor regeneration is complete, zero the instrument. See page 13.

  NOTE: For maximum accuracy, such as when testing with the Functional Test Module, wait 30 minutes after the sensor regeneration cycle to re-zero the unit. For immediate use, the unit can be re-zeroed immediately after sensor regeneration. See the notes on page 13.

- Press the SAMPLE button.
  - During the sample cycle, the digital meter displays bars (-, --, or ---) to indicate the amount of sensor saturation.

- At the end of the sampling cycle, read the digital meter.
  - The number shown on the digital meter is the hydrogen sulfide concentration in ppm.
  - This value remains on the display until the next sample is taken.
  - The digital meter automatically zeroes at the start of each sample.

- At the end of each day's use, perform sensor regeneration as described in the next section.

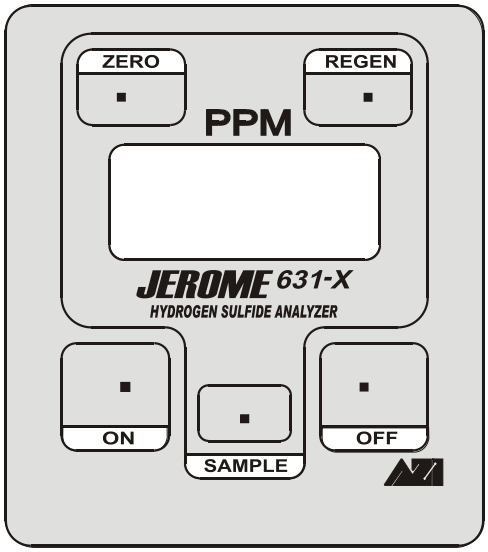

DO NOT ALLOW HYDROGEN SULFIDE TO STAY ON THE GOLD FILM SENSOR OVERNIGHT.

Sensor Regeneration

Sensor regeneration is needed to clear the 631-X sensor of any accumulated hydrogen sulfide. This simple procedure should be done:

- At the beginning of the day on which the instrument is to be used.
- During the day when the sensor becomes saturated.
- At the end of the day before storing the instrument.

CAUTION:

Ensure the voltage selector on the back of the instrument, near the power cord inlet connector, points to the local AC power value. See "Setting the Input Voltage" on page 21.

To clean and protect the sensor, the supplied AC power must be 100 to 120 VAC or 220 to 240 VAC, depending on the available power source.

Once sensor regeneration is initiated, DO NOT interrupt the cycle.

- Attach the power cord to the 631-X and plug it into AC power. AC power is required to thermally regenerate the sensor.
- Press the power ON button.
- Press the REGEN button.
  - ➢ The digital meter flashes .H.H.H for the duration of the 10-minute cycle and displays .0.0.0 when the cycle is completed.

DO NOT INTERRUPT THIS CYCLE.
Wait until the cycle is completed before continuing with the next step.

- **A minimum 30-minute wait after the sensor regeneration cycle is complete ensures maximum sample accuracy. However, the unit can be used immediately following the sensor regeneration if necessary. When the sensor regeneration is complete, press ZERO and adjust the ZERO ADJUST pot until 0 appears on the display. Install the zero air filter in the intake and take several samples or lock the instrument into survey mode (see page 15). After approximately one minute, stop sampling and check the ZERO. Adjust to 0. Repeat sampling through the zero air filter until reading remains on 0.**

NOTE: The digital meter will read .P.P.P after REGEN is activated if the power cord is not plugged in or if the instrument's fuse needs to be replaced. Connect the power cord, or if necessary, replace the fuse. See "Changing the Fuse" on page 22.

Zero Adjust

- To ensure air entering the instrument is clean, install the zero air filter in the instrument's intake and sample until the readings stabilize.
- While pressing the ZERO button, turn the ZERO ADJUST potentiometer (shown at right) using the trimmer tool until the digital meter reads 0.
  - If the LCD reads H, turn the ZERO ADJUST counter-clockwise;
  - If the LCD reads L, turn the ZERO ADJUST clockwise.

NOTE: A minimum 30-minute wait after the sensor regeneration cycle is complete ensures maximum sample accuracy. The unit can be used immediately following the sensor regeneration if necessary. When the sensor regeneration is complete, press ZERO and adjust the ZERO ADJUST pot until 0 appears on the display. Install the zero air filter in the intake and take several samples or lock the instrument into survey mode (see page 15). After approximately one minute, stop sampling and check the ZERO. Adjust to 0 if necessary. Repeat sampling through the zero air filter until sensor remains on 0.

NOTE: When ZERO is pressed, depending upon internal configuration, a number between 00 and 100 may appear on the display instead of H, L, or O. See APPENDIX C - INTERNAL DIP SWITCH SETTINGS, on page 39, for details. If the instrument is configured with Option Functionality, see APPENDIX D - JEROME® 631-X OPTION FUNCTIONALITY beginning on page 40.

CAUTION:
Do not turn the ZERO ADJUST potentiometer between samples.

Turn the ZERO ADJUST only after a sensor regeneration cycle, otherwise invalid readings will result.

- Press the power OFF button and disconnect the power cord.
- The Jerome® 631-X is ready for sampling.

CAUTION:
The Jerome® 631-X is intended for vapor use only. DO NOT allow the probe or the instrument's intake to be exposed to liquids, dust or other foreign material. Moisture or liquids drawn into the instrument can damage the sensor and flow system.

Sample Mode

This is the standard operation mode and is used for optimum accuracy.

- Press the power ON button.
  - The LCD displays 000.
  - Disregard the LCD's initial momentary readings.
  - Recharge or replace the battery pack if the LO BAT indicator REMAINS ON, see page 17 and/or page 21 if necessary.

- Allow a 1-minute warm up before beginning the next step to ensure the instrument's electronics have stabilized.

- Press the SAMPLE button.
  - During the sampling cycle, the bar (or bars) shown on the LCD indicates the current percentage of sensor saturation. (Refer to "LCD Codes" on page 10 for code descriptions.)
  - The length of the sample cycle depends on the concentration of hydrogen sulfide.

RANGE	CONCENTRATION	RESPONSE TIME	ACCURACY at MID-RANGE
0	0.001 to 0 .099 ppm	30 Seconds	± 0.003ppm at 0.050ppm
1	0.10 to 0.99 ppm	25 Seconds	± 0.03ppm at 0.50ppm
2	1.0 to 9.9 ppm	16 Seconds	± 0.3ppm at 5.0ppm
3	10 to 50 ppm	13 Seconds	± 2ppm at 25ppm

- At the end of the sampling cycle, read the LCD.
  - The number shown on the digital meter is the hydrogen sulfide concentration in ppm.
  - As the instrument auto-ranges, the decimal point moves to the correct position to show the concentration.
  - The value remains displayed until the next sample is taken. The digital meter will then automatically zero before displaying the next sample value.
  - When elevated readings are detected:
    - Confirm the reading by taking an additional sample.
    - Install the zero air filter and verify that the readings reduce to zero or very near zero.
    - Remove the filter and sample the location again to verify that elevated readings do exist.
  - When the sensor is completely saturated, the LCD displays .8.8.8 instead of a value. No further operation is possible until sensor regeneration is performed. (Refer to "Sensor Regeneration" on page 12.)
- Press the power OFF button when not in use.

Note: The Jerome® 631-X operates approximately six (6) hours on a fully charged battery.

Survey Mode

The survey mode takes samples every 3 to 20 seconds automatically. The length of time varies with the hydrogen sulfide concentration. Use this mode to locate the source of hydrogen sulfide, such as a leak, a hot spot, or to assess areas of potentially high hydrogen sulfide concentrations. After the survey mode is activated, the 631-X samples continuously.

- Press the power ON button.
  - The digital meter displays 000.
  - Disregard the LCD's initial momentary readings.
  - Recharge or replace the battery pack if the LO BAT indicator REMAINS ON, see page 17 and/or page 21 if necessary.

- Allow a 1-minute warm up before beginning the next step to ensure the instrument's electronics have stabilized.

- Lock the instrument in the survey mode:
  - Hold the SAMPLE button down until the sensor status indicator bar(s) begin flashing on the display.
  - Press the ZERO button, then release the SAMPLE button.
  - The pump should continue to run and the display should update every survey cycle.

- The instrument remains in the survey mode until one of the following occurs:
  - The sensor is saturated.
  - A LO BAT (low battery) signal is encountered.
  - An HL (high hydrogen sulfide level) is encountered.
  - The instrument is turned OFF.

- Press the power OFF button to end the survey mode.

RANGE	CONCENTRATION	RESPONSE TIME
0	0.001 to 0 .099 ppm	20 Seconds
1	0.10 to 0.99 ppm	15 Seconds
2	1.0 to 9.9 ppm	6 Seconds
3	10 to 50 ppm	3 Seconds

NOTE: Approximately 100 samples at 0.5 ppm may be taken before the sensor saturates and regeneration is required.

Operating on AC Power or Generator

- For stationary use, the 631-X may be operated on AC power.
  - Operating the instrument on AC power at all times eliminates the need for the battery pack and its necessary maintenance.
  - The battery may be unplugged or removed completely whenever the instrument is operating on AC power.

- When a generator is used to power the Jerome® 631-X, a high quality line conditioner or voltage regulator is required to ensure a pure sine wave and regulated voltage is applied to the instrument. The gold film sensor may be damaged by voltage that varies in amplitude or by surges, spikes, and/or noise on the power line.

Operating on Internal Battery Power

- For portable use, the 631-X may be operated on Battery power.
  - When you operate the instrument on battery power, please be aware of the following:
    - A fully charged battery pack, AZI P/N Z4000 0907 (115V) or Z4000 0908 (230V), provides power for a minimum of six (6) hours of operation.
    - For operating more than six (6) hours, an extra fully charged battery pack is needed.
    - Complete battery recharging takes 14 hours. Refer to Charging Batteries on page 17.
    - The 631-X uses a rechargeable Nickel Cadmium (NiCad) battery. Dispose of worn-out batteries properly when you are replacing the battery pack.

External battery power

A special version of the Jerome® 631-X and a DC Power Kit are available to operate the instrument from a secondary DC source. The source may be a car/truck battery or a storage cell used in conjunction with solar panels.

Call AZI Customer Service at 800-528-7411, 602-470-1414, or e-mail support@azic.com for additional information.

Charging Batteries

- Press the power OFF button.
- Connect the AC power cord between the 631-X power receptacle and an AC power source.
  - Complete battery recharging takes 14 hours.
  - The 631-X contains a trickle charger so it may be continually plugged into an AC power source without damaging the battery pack.
- The battery pack may be charged outside the instrument with an optional AZI IDC Battery Charger. (AZI P/N 4000-1011, for 115 VAC, P/N 4000-1012, for 230 VAC)

Obtaining Maximum Battery Life

There are certain inherent limitations to NiCad batteries. The primary limitation is a memory effect that occurs when the batteries are partially discharged and then recharged, repeatedly. This memory leads to a drastic reduction in the usable battery life. To prevent this memory effect, periodically allow the battery pack to discharge completely, and then recharge the battery pack.

- To obtain maximum battery life, follow these three (3) steps:
  - At least once a month wait until LO BAT appears on the digital meter before recharging the battery pack.
  - Charge the battery pack when the LO BAT indicator comes on. Excessive discharge can damage the battery pack.
  - Before storing the instrument verify the power is OFF.

- When the batteries fail to hold a charge, the battery pack should be replaced.
  - Battery life under normal usage is approximately 1 year, depending on the number of charge and discharge cycles.

5. MAINTENANCE

Preventive Maintenance Calendar

To keep the Jerome® 631-X operating at peak performance, follow the maintenance schedule below as a guide. Since maintenance is more a function of application and amount of use rather than time, your requirements may be different from the listed schedule. Call AZI Customer Service at 800-528-7411, 602-470-1414, or e-mail support@azic.com for additional guidance for your environment and operation.

PART/COMPONENT	MAINTENANCE CYCLE	REFER TO PAGE
Charge batteries	At least once per month, after 1 month's storage, or when LO BAT appears	Page 17
Change 0.25 inch fritware	Weekly or as needed	Page 19
Change internal filters and tubing	After 6 months of use or as needed	Page 20
Replace zero air filter[1]	Annually	
Factory calibration	Annually	Page 23
Calibration check	Monthly or as needed	Appendix A, Page 36
Replace batteries	Annually or as needed. The battery pack contains NiCad batteries. Dispose of properly.	Page 21

NOTE: Install the zero air filter into the instrument's intake during storage.

[1] Zero air filters, LFS and LFD scrubber filters contain Resisorb® or AddSorb® VA13. Call AZI Customer Service at 800-528-7411, 602-470-1414, or e-mail support@azic.com for a copy of the Safety Data Sheet (SDS). Dispose of all filters properly.

Flow System

The Jerome® 631-X's flow system is the crucial link between the sensor and the sample. For the instrument to perform correctly, the flow system must be properly maintained. The user maintainable components of this system are the intake filter (0.25 inch fritware), two scrubber filters and connecting tubing.

Check the Preventive Maintenance Calendar on page 18, for a suggested schedule for changing fritware and scrubber filters. The Tygon® tubing in the system must be free of crimps for proper flow.

Part	Part Number
Scrubber Filter	Z2600 3930
LFS Scrubber Filter	Z2600 3933
LFD Scrubber Filter	Z2600 3934
0.25 inch Fritware Filter	2600 3039
Tygon® Tubing (clear) 1/8" I.D. (1')	345-0050
Tygon® Tubing (clear) 1/16" I.D. (1')	345-0244
Tygon® Fluran Tubing (black) 1/16” I.D. (6”)	345-0257

0.25 inch Fritware Filter

Replace the 0.25 inch fritware filter once each week or as needed. In dusty environments, the fritware filter may need to be replaced as often as once a day. Replacement 0.25-inch fritware filters are available from AZI, Consumable Sales at 800-528-7411 or 602-470-1414.

- Unscrew and remove the intake.

- Push the old fritware filter disc out of the intake with your trimmer tool.
- Avoid touching the new fritware disc with fingers. Use tweezers to insert the new fritware.
- Use the blunt end of the trimmer tool to seat the fritware disc firmly against the inner ledge of the intake.
- Screw the intake back on the Jerome® 631-X.

CAUTION:

The stem coming from the instrument onto which the outer intake housing is attached must be securely held in place. If loose, the tubing inside the instrument can become twisted when the intake housing is replaced. It may be necessary to open the instrument and tighten the hold-down nuts inside the instrument. Call AZI Customer Service at 800-528-7411, 601-470-1414, or e-mail support@azic.com if you have any questions

Internal Filters

- Replace the internal filters after six (6) months of use, or as needed.
- Press the power OFF button and unplug the power cord.
- Remove the two (2) side screws from the intake end of the instrument and open the case.
- Carefully disconnect the Tygon® tubing from both ends of the filters and discard the old filters.

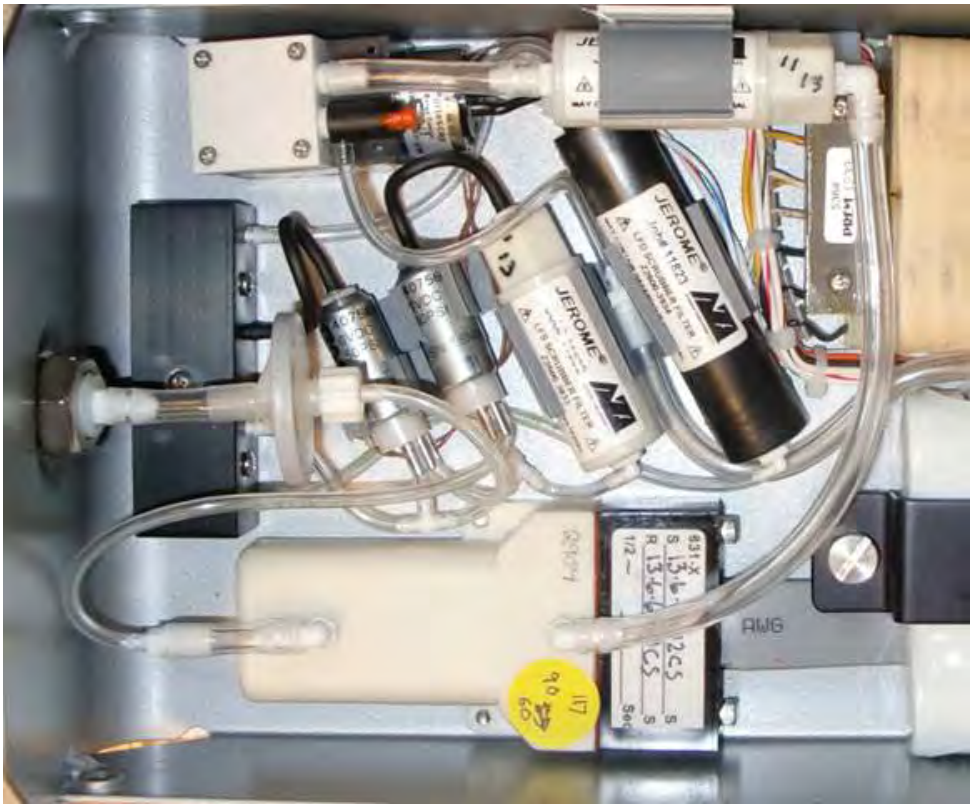

CAUTION:
Scrubber filters contain Resisorb® or AddSorb® VA13. Used filters, especially the scrubber filter may contain hydrogen sulfide also. Use proper methods when disposing of used filters. Call AZI Customer Service at 800-528-7411, 601-470-1414, or e-mail support@azic.com for a copy of the Resisorb® or AddSorb® VA13 SDS or for other questions.

- Connect the new filters to the Tygon® tubing, ensuring all straight hose barbs point toward the intake/pump corner of the case and elbow hose barbs point toward the sensor housing as shown in the illustration.
  - ➢ Push the Tygon® as far as it will go onto the filter fittings.
- Push the filters into the mounting clips.
- Remove any crimps or twists in the tubing and ensure that tubing connections are secure. If the tubing is loose, readings may not be accurate. Replace any tubing that has deteriorated due to heat and/or age.
- Close the case and replace the screws.
- Dispose of all filters in accordance with state and federal environmental regulations.

Replacing the Battery Pack

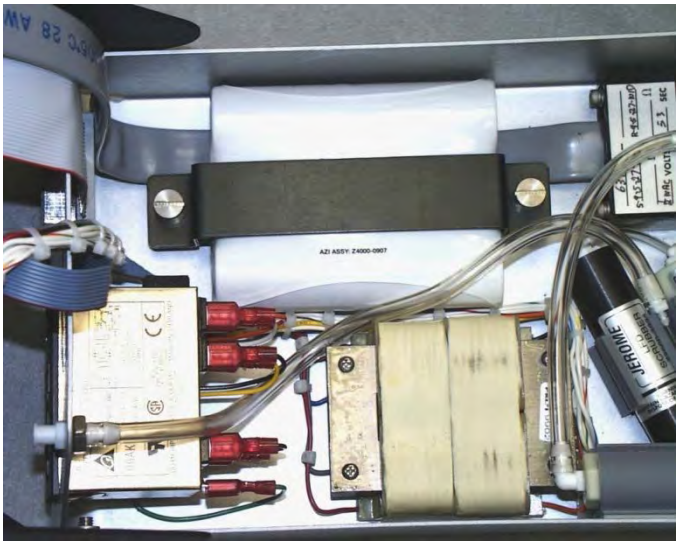

- Press the power OFF button.
- Unplug the power cord.
- Remove the two (2) side screws from the intake end of the instrument and open the case lid.
- Disconnect the battery connector from the board.
- Loosen the two (2) captive screws holding the battery bracket and remove the bracket.
- Remove the old battery pack and replace with a new battery pack.
- Replace the battery bracket and tighten the captive screws.
- Ensure the battery and battery bracket do not crimp or restrict any of the tubing. Adjust if necessary.
- Connect the new battery connector to the board.
- Close the case and replace the two (2) side screws.
- Dispose of the old NiCad battery in accordance with state and federal regulations.

Setting the Input Voltage

Instruments are factory set and calibrated to use the power setting requested on the order. However, the voltage setting is easily changed to use either 110 or 220 VAC.

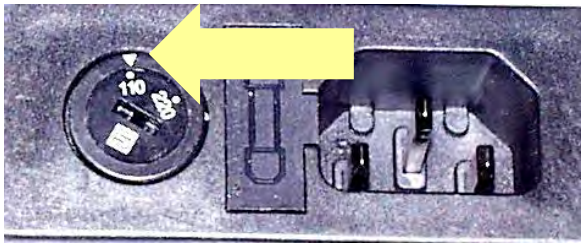

- Ensure the instrument is turned OFF and unplugged.
- Locate the voltage selector on the rear of the instrument.
- Insert a small screwdriver in the voltage selector slot and turn the selector until the arrow points toward your setting choice and a click is heard.

Changing the Fuse

If the instrument display reads .P.P.P when the instrument is connected to AC power or when REGEN is pressed, or if the battery will not charge, the fuse may need to be replaced. The AC line power could also be less than 100 VAC (220 VAC). Check the fuse with an ohmmeter and the AC line power with a voltage meter.

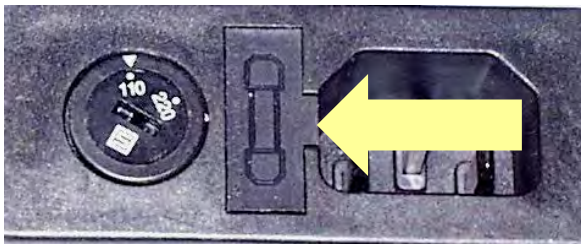

- Locate the power receptacle on the rear of the instrument.
- Insert a small screwdriver in the slot, located in the power receptacle, and gently slide the fuse compartment out.
- If the fuse in the open-sided clip is open, remove and discard it.
- Replace the discarded fuse with the spare fuse located in the slide-out spare fuse compartment.
- Replace the fuse compartment in the power receptacle.
  - ➢ As soon as possible, replace the spare fuse with another 1A, 250V, time delay fuse, AZI P/N 5100 1012).

6. CALIBRATION

The Jerome® 631-X's gold film sensor is inherently stable and does not require frequent calibration. The interval between calibrations depends upon the application and frequency of use; however, the recommended interval is every 12 months.

The Jerome® 631-X has been factory calibrated using laboratory equipment containing NIST traceable permeation tubes. In order to calibrate the Jerome® 631-X, a sophisticated calibration system is required that ensures stability of the calibration gas source, eliminates any pressure in the calibration gas stream, and controls the temperature of the calibration environment. Calibration requires the controlled environment, gas source, and computer software available only at the factory or authorized repair/calibration facility.

We strongly recommend you take advantage of our calibration and maintenance service at Arizona Instrument. Call Customer Service at (800) 528-7411 or (602) 470-1414 to arrange re-calibration. A certificate of calibration is issued from AZI when your instrument is factory calibrated.

Verification of Functionality and Quality Control

The Functional Test Module, AZI P/N Z2600 0918 or Z2600 0930, is used to determine if your instrument is functioning correctly between recommended annual factory calibrations. It allows you to have complete confidence in the sample results. This test verifies proper instrument operation through the introduction of a known concentration of hydrogen sulfide into the Jerome® analyzer.

THIS IS A FIELD CHECK OF THE FUNCTIONALITY OF THE INSTRUMENT.

THIS TEST DOES NOT CALIBRATE THE INSTRUMENT.

If your application requires frequent verification of instrument function, this test demonstrates the unit's operation and function. Recording FTM results in an instrument log provides a quality control/quality assurance record of instrument function between regular calibrations. If test results fall within the expected range, you may assume the instrument is functioning correctly.

See APPENDIX A - 631-X FUNCTIONAL TEST MODULE on page 36 for more information about the FTM procedures. Complete instructions for use are supplied with the test kit, AZI P/N Z2600 0918 or Z2600 0930.

To order the FTM, contact your AZI Sales Representative at (800) 528-7411 or (602) 470-1414.

7. 631-X TROUBLESHOOTING

Symptom	Possible Cause	Solution
Power Problems		
Unit does not turn ON. Unit turns on when power cord is plugged in. LCD displays 000 when instrument is operating on AC power.	Discharged battery or Dead battery.	Recharge battery for a minimum of 14 hours. Refer to page 17. Replace battery. Refer to page 21.
Unit does not turn on when connected to AC power cord.	Open fuse. Insufficient power. Internal component failure.	Replace fuse. Refer to page 22. Use a voltmeter to verify there is power to the AC outlet. Call AZI Customer Service for information at 800-528-7411 or 602-470-1414.
Regeneration & Zero Problems		
LCD displays .8.8.8.	Sensor saturated.	Do not attempt to adjust zero pot. The sensor must be regenerated. Refer to page 12 for information.
LCD displays .L.L.L when taking first sample.	Changes in temperature.	Readjust zero pot. See page 13 for information.
LCD displays H at finish of sensor regeneration when zero is pressed.	Internal contamination may redeposit hydrogen sulfide from flow system onto gold film sensor.	Remove and replace fritware filter, intake filter disk, scrubber filters and Tygon® tubing. Refer to "Flow System" on page 19. Check tubing for kinks or crimps. Repeat regeneration cycle. Refer to page 12.
Zero adjust pot cannot be adjusted to 0.	Pot not turned sufficiently. Sensor may be ruptured or pot may be broken.	1. Turn zero adjust up to 20 times to reach the end. Pot will "click" softly. 2. If no "0", turn pot slowly in opposite direction until display reads "0". 3. If still unchanged, call AZI Customer Service at (800) 528-7411 or 602-470-1414.

Sampling Problems		
Airflow is restricted during the sensor regeneration cycle, causing possible permanent damage.	Kinks and crimps in the Tygon® tubing.	Periodically check the Tygon® tubing inside the instrument. Refer to page 20.
High erratic results.	Internal hydrogen sulfide contamination.	1. Install zero air filter in intake and tighten intake nut. Press SAMPLE button. After three samples, if readings are over 0.003 ppm, replace fritware filter, intake filter disk, and Tygon® tubing. Refer to page 19. 2. Perform sensor regeneration with the zero air filter in intake. Refer to page 12. Retest if necessary. Replace scrubber filters and Tygon® tubing. Refer to page 20.
High/erratic results	Intake and internal filters may become clogged and need replacement when sampling in a dusty or humid area.	1. Open instrument and check for pinched, crimped or disconnected internal tubing. 2. In extreme conditions, an additional particle filter may be installed on the intake.
High/erratic results Readings vary more than 0.003 ppm when in survey mode.	Loose connections to gold film sensor.	Place a zero air filter into the intake. Place the instrument in survey mode. Move the unit as samples are being taken. Call AZI Customer Service at 800-528-7411 or 602-470-1414 for assistance.
Low response or erratic readings after a long period of non-use.	May need a second regeneration cycle.	1. Wait 30 minutes and perform another sensor regeneration. 2. Test with FTM. Refer to page 36. 3. If still unresponsive,
False readings, may go to .8.8.8 or .L.L.L.	Extremely cold or extremely warm air sampled into unit.	If sampling under these conditions, install zero air filter in intake. Sample until display reads 0.003 ppm or less. This equilibrates sensor temperature with the temperature of the sample air stream. Remove filter and take samples.

Miscellaneous Problems		
Display reads .P.P.P when regeneration is attempted.	Power cord not attached. Blown fuse. Line voltage less than 100 VAC (or less than 200 VAC for 220V instruments). Cycles dipswitch set incorrectly.	Check power cord for connection Replace fuse. Refer to page 22. Check line voltage settings. Refer to page 21. Check input cycle settings. Refer to page 39. If fuse and line voltage are OK, it may be circuit board adjustment or component failure. Call AZI Customer Service at 800-528-7411 or 602 470-1414.
Display reads .E.E.E	Very low battery.	Recharge battery. Refer to page 17. Replace battery. Refer to page 21.

8. JEROME® 631-X TECHNICAL SPECIFICATIONS

Range	0.003ppm (3ppb) to 50ppm H_2S in four graduated ranges
Sensitivity	0.003ppm H_2S
Precision	5% relative standard deviation
Accuracy	Range 0: ± 0.003ppm at 0.050ppm H_2S Range 1: ± 0.03ppm at 0.50ppm H_2S Range 2: ± 0.3ppm at 5.0ppm H_2S Range 3: ± 2ppm at 25ppm H_2S
Response time-sample mode	
10 to 50 ppm (Range 3)	13 seconds
1.0 to 10.0 ppm (Range 2)	16 seconds
0.10 to 1.00 ppm (Range 1)	25 seconds
0.001 to 0.100 ppm (Range 0)	30 seconds
Response time-survey mode	
10 to 50 ppm (Range 3)	3 seconds
1.0 to 9.9 ppm (Range 2)	6 seconds
0.10 to 0.99 ppm (Range 1)	15 seconds
0.001 to 0.099 ppm (Range 0)	20 seconds
Flow rate	150 ± 10ml/min (0.15 ± .01 liters/min)
Power requirements	100-120 V~, 50/60 Hz, 1 A or 220-240 V~, 50/60 Hz, 1 A
Fuse	F1A 250V, 5mm X 20mm
Internal battery pack	Rechargeable Nickel Cadmium
- Standard model	AZI P/N Z4000 0907
- XE / 220V model	AZI P/N Z4000 0908
Operating environment	0° to 40 °C, non-condensing, non-explosive
Case construction	Aluminum alloy
Dimensions – standard model	33 cm L x 15 cm W x 10 cm H (13" L x 6" W x 4" H)
Dimensions – XE model	35 cm L x 18 cm W x 18 cm H (14” L x 7” W x 7” H)
Weight – standard model	3.18 kilos (7 pounds)
Weight – XE model	3.5 kilos (8 pounds)
Digital meter display	Liquid crystal display (LCD)
Certification	CE mark on 220-240 V~, 631-XE model only.

Optional Communications Capability

Data output	1. RS-232 Serial, Baud Rate 1200 for use with Data Logger, and/or Jerome® communication program. 2. RS-232 Serial data format with 0 & 20mA current logic levels; Baud Rate 1200 (special industrial applications) and Analog 20 mA output.

"OPTION FUNCTIONALITY" - See APPENDIX D - JEROME® 631-X OPTION FUNCTIONALITYAPPENDIX D - JEROME® 631-X OPTION on page 40.

Analog output	0 to 2V or 4 to 20 mA
Auto sample interval	5, 15, 30, or 60 minutes[2]
Auto regeneration interval	6, 12 or 24 hours

Instrument I/O Interface

The 631-X I/O port (25 pin D-sub) provides the following functions:

- Serial data communication
  - Interface type: RS-232C full duplex, DCE
  - Parameters: 1200 Baud, 1 start bit, 8 data bits, 2 stop bits, no parity
  - Pin assignments:

    Pin 1 Protective ground
    Pin 2 Data in
    Pin 3 Data out
    Pin 7 Data ground

- Switched battery connection for Data Logger
  - Pin assignments:

    Pin 9 Battery (+)
    Pin 7 Battery ground (-)
    Pin 23 Battery ground (-)

- Unswitched battery connection for external battery pack pin assignments
  - Pin assignments:

    Pin 15 Battery (+)
    Pin 19 Battery (+)
    Pin 7 Battery ground (-)
    Pin 23 Battery ground (-)

NOTE: Pins 6, 8, 11, 17, 18, 20 and 21 are non-standard and should not be connected.

[2] When the instrument is used for continuous auto-sampling, the estimated life of the gold film sensor decreases and the sensor will become a maintenance item. For example, sensor life is reduced to approximately six months if the instrument is run continuously with a 30-minute sample interval and a 48-hour regeneration interval or reduced to three months when using a 15-minute sample interval and a 24-hour regeneration interval.

Potential Interferences

Potential interferences to the Jerome® hydrogen sulfide analyzers are rare and most of these can be eliminated with proper maintenance procedures. However, erroneously high readings can sometimes occur. Here are a few things to be aware of when using the instrument:

The gold film sensors used in the Jerome® hydrogen sulfide analyzers do not respond to the following compounds:

- Hydrocarbons
- CO, CO_2, and SO_2
- Water vapor (Note that water vapor condensation on the gold film can cause irreparable harm to the sensor and must be avoided.)

However, the following compounds may cause the gold film sensor to respond:

- Chlorine
- Ammonia
- NO_2
- Most mercaptans (organic sulfur compounds or "thiols")

Special filters designed to remove chlorine or ammonia gas are available from Arizona Instrument and may be ordered as Chlorine Filter, AZI P/N Z2600-3940 or Ammonia Filter, AZI P/N 990-0183. Visit the "Tech Notes" section at www.azic.com for more information concerning the chlorine and ammonia filters.

Filter replacement at regular intervals, or when unexpectedly high readings are encountered in areas of these potential interferents, may resolve these problems.

9. ACCESSORIES & MAINTENANCE PARTS

PART #	ITEM DESCRIPTION	
Y631 0901	**631 Accessory Kit** (See pictures beginning on page 32)	
	1400 2002	Probe
	1400 3010	Tubing Adapter, 1/4” to 1/8”
	2300 0001	Trimmer Tool
	2600 3039	0.25 Fritware
	6000 4003	Line Cord, 115 VAC - USA and Canada
	Alt. 200-0003	Line Cord, 220-240 VAC - England
	Alt. 200-0008	Line Cord, 220-240 VAC - Europe
	Z2600 3905	Zero Air Filter
Z2600 0918 or Z2600 0930 & Y2600 0920	**631 Functional Test Module (FTM) or** **631 Low-Level Functional Test Module** **FTM Accessory Kit** (See pictures beginning on page 32)	
	1300 0031	1/8” x 3/16” reducer
	1400 3010	Tubing adaptor
	2300 0003	Allen wrench
	345-0050	1’ of 1/8” Tygon® tubing
	2500 3010	1’ of 3/16” Tygon® tubing
	2600 3010	Filter cap
	2600 3055	1 Lb. Desiccant
	2800 2044	(2) Guide pins
	6000 4003	115 VAC Line Cord
		Permeation Tube Assembly
	1400 3196	Perm Tube Housing
	2600 3054	0.63” Diameter Fritware
	1300 1025 or	Perm Tube (0.250 ppm / 250 ppb) (for Z2600 0918)
	1300 1040	Perm Tube (0.030 ppm / 30 ppb) (for Z2600 0930)
	700-0095	FTM Operation Manual
Y631 0905	**631 Maintenance Kit** (See pictures beginning on page 32)	
	345-0050	1' of 1/8” Tygon® clear tubing
	345-0244	2' of 1/16” Tygon® clear tubing
	345-0257	6” of 1/16” Tygon® Fluran black tubing
	2600 3039	0.25 inch fritware
	Z2600 3905	Zero Air Filter
	Z2600 3930	Scrubber Filter
	Z2600 3933	LFS Scrubber Filter
	Z2600 3934	LFD Scrubber Filter
	Z4000 0907	Battery Pack Assembly

Note: The Battery Pack Assembly for 220V / XE models is a different part number and must be ordered separately:

	Z4000 0908	Battery Pack Assembly (220V / XE models)

Y990-0259	**Jerome® Data Logger & JCS** Includes the external Jerome® Data Logger and Jerome® Communication Software (JCS) Kit (see below) * For Non-SMV instruments	
Y990-0257 Y990-0258 (software upgrade only)	**Jerome® Communication Software Kit (JCS)** (external Data Logger not included) * For SMV instruments For customers with prior version of the JCS.	
Y411 0904	**Hard Side Carry Case** Includes a molded case with die cut foam rubber inserts to hold the Jerome® 631-X and accessories.	
1400 0052	**Soft Field Carrying Case** Hand/shoulder case with pockets for accessories.	

Spare Parts

1400 2002	Probe	
2300 0001	Trimmer	
1300 0031	1/8” x 3/16” reducer	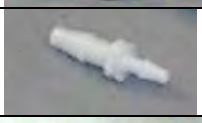
Z4000 0907 Z4000 0908	Battery Pack Assembly (115V) Battery Pack Assembly (230V and XE)	
Z2600 3905	Zero air filter	
Z2600 3933	LFS scrubber filter	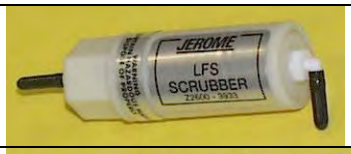
Z2600 3934	LFD scrubber filter	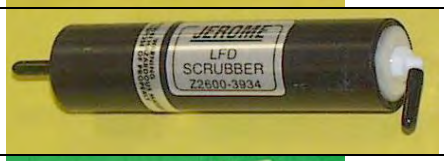
Z2600 3930	Scrubber filter	
Z2600 3940	Chlorine Filter	
990-0183	Ammonia Filter	
1400 3010	Tubing adapter	

Y2600 3945	Intake Kit		Includes mounting hardware.
PS-151	Tube Nut		
2600 3039	0.25 inch fritware		
2600 3061	Acrodisc® Filter		
345-0050	Tygon® tubing 1/8” I.D. (1 foot)		
345-0244	Tygon® tubing 1/16” I.D. (1 foot)		
345-0257	Tygon® Fluran tubing 1/16” I.D. (6 inches)		
4000 1011	115 VAC IDC battery charger (Used to charge an uninstalled battery)		

4000 1012	230 VAC IDC battery charger (Used to charge an uninstalled battery)	
6000 4003	100-120 VAC Line Cord	
Alternate – 200-0003	220-240 VAC Line Cord for England	
Alternate – 200-0008	220-240 VAC Line Cord for Europe	
990-0225	10 to 1 Dilution Module	

5100 1012	Spare Fuse	
6000 1055	Jerome® Communication Cable	

For current prices and delivery information, call AZI Customer Service at (800) 528-7411 or (602) 470-1414.

10. Factory Calibration Service

Service includes filter replacement, component testing, and instrument calibration to NIST traceable standards.

For scheduling and shipping authorization, call AZI Customer Service at (800) 528-7411 or (602) 470-1414.

11. APPENDIX A - 631-X FUNCTIONAL TEST MODULE

The Jerome® Hydrogen Sulfide Functional Test Module (FTM) provides a fast and easy method of verifying that Jerome® 631-X Hydrogen Sulfide Analyzers are functioning correctly.

THIS IS A FIELD CHECK OF THE FUNCTIONALITY OF THE INSTRUMENT.

THIS TEST DOES NOT CALIBRATE THE INSTRUMENT.

The Functional Test Module is beneficial:

- In applications where frequent verification of functionality is required,
- To verify proper instrument operation when unexpected readings are obtained in normal sampling,
- As part of a weekly maintenance routine, and
- To determine if analyzer calibration is needed.

Simple Operation

The Functional Test Module includes a permeation tube containing hydrogen sulfide. When activated, the test module releases this H_2S from the permeation tube at a specific, known concentration. The H_2S flows over the gold film sensor of the Jerome® analyzer, which then measures the amount of exposure to the gas. The flow rate and temperature of this release are factory set to provide a concentration of approximately 250 ppb (0.250 ppm) ±20% when using FTM Z2600 0918 or approximately 30 ppb ± 20% when using the Low-Level FTM (Z2600 0930). The user then compares the reading on the Jerome® analyzer with the known concentration from the module. If the H_2S level shown on the analyzer's display falls within the expected range for the FTM being used, the instrument is functioning properly. If the level is not in the expected range, it should be returned to the factory for NIST-traceable calibration.

See page 30 for a list of the components that make up the FTM and its accessory kit.

The FTM, with the exception of the permeation tube, carries a limited one-year warranty to be free from defects or workmanship. The permeation tube is warranted for 90 days. Refer to the FTM Operation Manual AZI P/N 700-0095 for complete operation and warranty information.

12. APPENDIX B - JEROME® COMMUNICATIONS SOFTWARE

The Jerome® Communications Software (JCS) is used with 631-X Hydrogen Sulfide Analyzers that feature the communications configuration option, available in both SMV and Non-SMV instruments.

- The JCS allows the user to program the instrument for unattended monitoring and to download recorded data stored in the Jerome® Data Logger.
- Automatic sampling can be initiated every one (1) to sixty (60) minutes with programmable audible alarm levels.

The Jerome® Communications Software (JCS) operates with the Jerome® 431-X Mercury Vapor and Jerome® 631-X Hydrogen Sulfide Analyzers that have the "Communications Configuration" option installed. The software can control instrument sampling for unattended continuous operation, collect data, graph this data in real time and perform statistical analysis.

The software can also program the Jerome® Data Logger. This optional accessory enables data storage during manual sampling or portable automatic sampling without being attached to a computer. The Data Logger initiates automatic sampling, triggers alarms and stores data. The logged data may then be downloaded to the computer when it is convenient. The Data Logger stores up to 1,000 data points. On SMV units with Data Logger functionality, this functionality is integrated into the instrument, while Non-SMV units use an external Data Logger (AZI# 6100 0010) that attaches to the back of the instrument.

The JCS is menu-driven and easy to use. Each display screen is designed for clarity with self-explanatory menu options, such as "Operate Instrument" or "Display Stored Data." Select menu options using either a mouse or a track ball pointing device or a standard keyboard. The user creates records, or files, for computer storage of collected data. Data is easily retrieved for later viewing, graphing, printing or editing with spreadsheet or word processing software (not provided). Data can be used for ongoing record keeping or for fulfilling local regulatory requirements.

Before using this software, familiarization with the operation of the Jerome® Hydrogen Sulfide Analyzer or Mercury Vapor Analyzer is important. Also, prior to installation of this software you should be familiar with the personal computer and operating system you are using. If you have any questions about how to proceed, call AZI Customer Service at (800) 528-7411 or (602) 470-1414 or send an e-mail to support@azic.com for assistance.

JCS Kit Contents

- Jerome® Communication Software on CD-ROM with security key
- Jerome® Communication Cable, AZI P/N 6000 1055
- User's manual
  - For full details on JCS refer to the JCS Manual AZI# 700-0138 or contact your sales representative.

Optional equipment for Non-SMV instruments:

- External Jerome® Data Logger

System Requirements

- Jerome® 631-X with the "Communications Option." These Jerome® instruments have a DB-25 connector and related internal hardware and firmware.
- Windows® 7 or 8
- At least one free serial port (or two free USB ports if using a RS-232/USB converter)
- One free USB port

Data Logger Option

The software can also program the Jerome® Data Logger used with the Jerome® analyzer. The computer programs the Data Logger that either attaches to the DB-25 connector on the rear of Non-SMV instruments or is integrated into the instrument in SMV instruments with Data Logger functionality. The Data Logger initiates automatic sampling, triggers alarms and stores data. This optional accessory enables portable automatic sampling without a dedicated computer.

13. APPENDIX C - INTERNAL DIP SWITCH SETTINGS

The DIP switch identified as SW2 on the 631-X control board is located at the top center of the board.

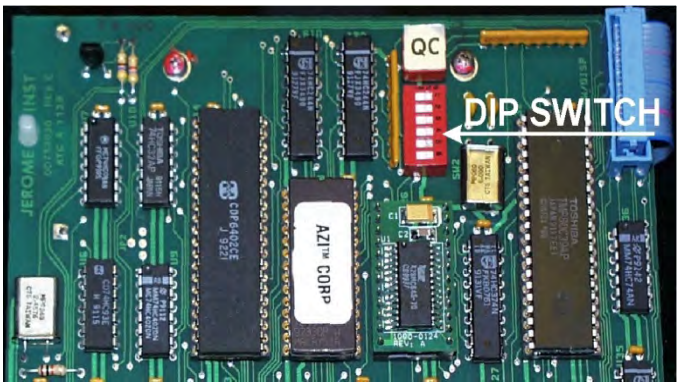

Non-SMV Instruments

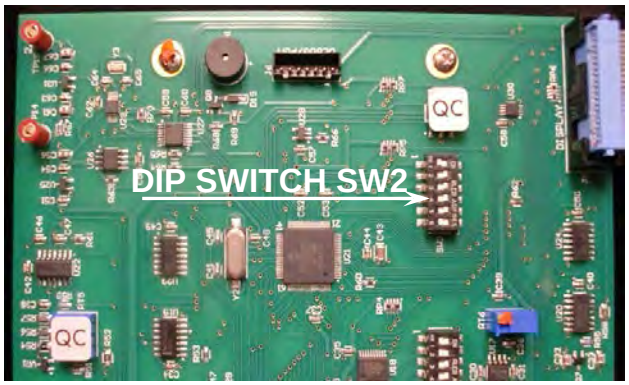

SMV Instruments

CAUTION:
Switch the instrument's power to OFF before opening the instrument and changing DIP switch settings.

DIP Switch Settings:

Switch #	Position	Function	Comment
1	ON	AUTORANGE	DISABLED (SEE DIP SWITCHES 5 & 6)
1	OFF	AUTORANGE	ENABLED
2	X	NOT USED	
3	X	NOT USED	
4	ON	ZERO DISPLAY: 00-99	
4	OFF	ZERO DISPLAY: L-O-H	

Switch #		Function	Comment
5	6	RANGE	SAMPLE TIME
ON	ON	0 (.000 - .099PPM)	30 SECONDS
ON	OFF	1 (0.10 - 0.99 PPM)	25 SECONDS
OFF	ON	2 (01.0 - 09.9 PPM)	16 SECONDS
OFF	OFF	3 (10 - 50 PPM)	13 SECONDS

14. APPENDIX D - JEROME® 631-X OPTION FUNCTIONALITY

On Non-SMV instruments, the Option Functionality is provided by the Option Circuit Board mounted on the Main Circuit Board. On SMV instruments equipped with the Option Functionality, the Option Functionality is integrated into the Main Circuit Board.

Proper use of this board requires that the base instrument be fully functional and set correctly for the intended operation.

Non-SMV Instruments with an Option Circuit Board installed:

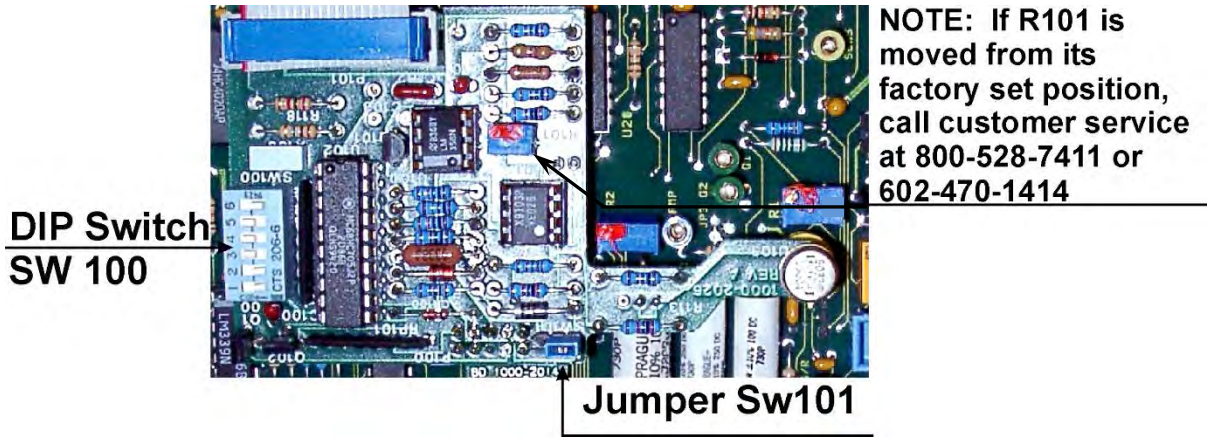

SMV Instruments that have the Option Functionality:

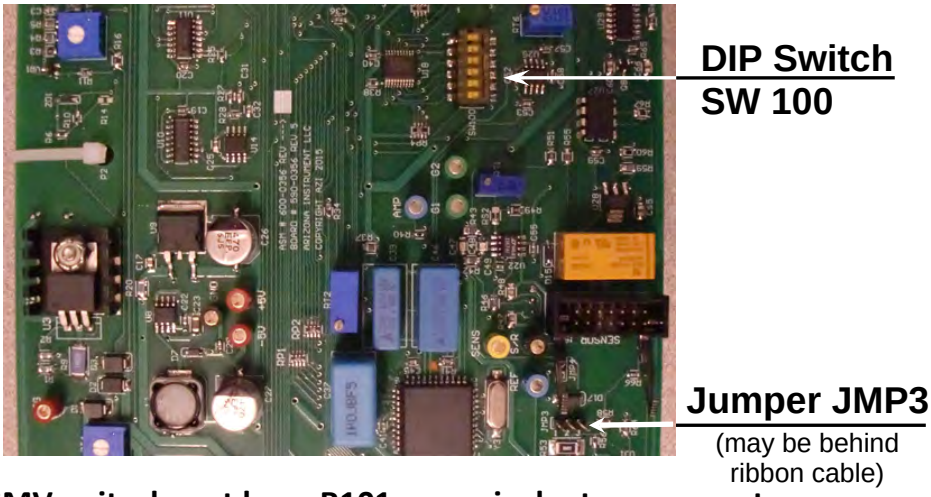

NOTE: SMV units do not have R101 or equivalent component.

Auto-Zero

With the Option Functionality installed, the 631-X has a limited auto-zero function. This function cannot be disabled and is transparent to the user. The instrument can be manually zeroed as described in "Zero Adjust" on page 13. However, if the instrument is to be operated by personnel not familiar with the procedure or if it is operated unattended, the auto-zero function should satisfactorily zero the unit after each sensor regeneration.

Instrument Zeroing

The Jerome® 631-X has three ways to zero the sensor reading before samples are taken if the Option Functionality is installed.

(1) The instrument automatically re-zeroes between samples so that each sample is a unique reading. To take a sample, simply press the SAMPLE button.

(2) The manually adjusted zero, using the switch on the top of the 631-X is used to re-establish a baseline between the reference and sensor gold films **only after a sensor regeneration**. This zero is manually adjusted by pressing the ZERO button and turning the potentiometer on the top of the instrument until the display reads 0. **Adjust only after sensor regeneration;** it is normal for H to be displayed after sampling.

(3) The 631-X Option Functionality provides an auto-zero feature following regeneration that is invisible to the user.

- In some cases, the instrument cannot resume sampling after regeneration. .L.L.L appears on the display when the ZERO button is pressed and the error message "manual bridge adjust needed" is added to the notes column of the JCS text file when the JCS is used. If this problem persists, it may be necessary to re-set the auto-zero.
- When necessary to re-adjust the auto-zero point:
  - Ensure the instrument has been regenerated and 30 minutes have passed since the regeneration completed before proceeding.
  - Turn the instrument off.
  - Make a note of the original DIP switch settings of SW100 on the Option Circuit Board (Non-SMV units) or on the Main Circuit Board (SMV units).
  - On the Main Circuit Board DIP switch SW2, turn DIP switch 4 to ON.
  - Set the DIP switch SW100, to 1,2,6 OFF; 3,4,5 ON.
  - Turn the instrument ON.
  - Press and hold the ZERO button and adjust the potentiometer on top of the instrument until the number 20 is displayed, then release the ZERO button.
  - **Non-SMV units only:**
    - Switch SW100 DIP #1 from OFF to ON three times, leaving it set to ON. (i.e. starting from OFF, switch it ON, OFF, ON, OFF, ON).
    - Press and hold the ZERO button while turning the potentiometer on the option board until the number 20 is displayed. Note the display may flicker one digit.
  - **All units:** Return all switches to their original position.

NOTE: The higher the auto-zero number, the lower the sensor capacity and the more sensor regenerations are needed.

Timed Regeneration

If the unit is to be operated unattended for extended periods, AZI recommends that the sensor be regenerated regularly. Operation under JCS or Data Logger control automatically regenerates saturated sensors. Regeneration will not occur as shown when sample streams have a very low concentration of H_2S. The Option Functionality can control regeneration on a regular basis, every 6, 12 or 24 hours.

The regeneration intervals are set through a combination of switch settings as shown in the following table:

------- SW100---------		REGENERATION Interval (Hrs.)
DIP 1	DIP 2	
OFF	OFF	OFF
ON	OFF	6
OFF	ON	12
ON	ON	24

Auto-Sample

If a Data Logger is either not connected (on Non-SMV units), not activated (on SMV units) or is operating in the manual sampling mode the following automatic sampling rates may be selected with SW100 DIP switch settings:

SW100 DIP switch settings			Sampling frequency
DIP 3	DIP 4	DIP 5	
ON	ON	ON	No automatic sampling
OFF	ON	ON	5 minutes
OFF	OFF	ON	15 minutes
OFF	ON	OFF	30 minutes
OFF	OFF	OFF	1 hour

This auto-sample function will not function if a Data Logger is connected and operating in automatic sampler mode programmed through the JCS.

4-20 mA Analog Output

The analog output signal at pin 18 of the 25 pin connector can be configured to provide the instrument's native mode 0-2 Volt output or the optional 4-20 mA output by setting a single jumper. Refer to the tables below for jumper placement. (Pin 23 is the ground pin for the analog output function. Pin 18 is positive with respect to the ground pin).

- The 0-2 Volt output circuit can drive loads of 10K ohms or higher.
- The 4-20 mA output is a passive transmitter and requires the connected receiver to supply between 10 and 28 volts DC.

The 631-X must have the auto ranging feature disabled in order to get accurate analog output readings. The approximate range of the H_2S concentration must be known before the instrument can be set into that specific range (0, 1, 2 or 3). The analog output signal is based on each individual range and not the entire range (0-50 ppm).

Note that neither analog output circuit is floating. The negative terminals of both circuits are connected to the instrument's common ground buss.

Jumper Sw101 Functions (Non-SMV Instruments):

Pin Pair Jumped	Function
V	0-2V analog output
I	4-20 mA analog output

Note: Power off the instrument before moving the jumper.

Jumper JMP3 Functions (SMV Instruments):

Pins Jumped	Function
1&2	0-2V analog output
2&3	4-20 mA analog output

Note: Power off the instrument before moving the jumper.

Jerome® 631-X instruments shipped after early 1995 are capable of providing 0-2 volts analog output. Instruments shipped before that time can be upgraded by a firmware update and adjustment.

Instruments can be upgraded to have 4-20 mA output with the addition of the Option Functionality upgrade. This must be performed at the factory.

Connection and Setup for 0-2 volt output:

- 0-2 volt devices connect as shown in Figure 1. If the instrument includes the Option Functionality, be sure its analog jumper is set as follows.
  - Non-SMV units: SW101 is set to the "V" position. (Power off the instrument first if the jumper needs to be changed.)
  - SMV units: JMP3 is set to pins 1&2. (Power off the instrument first if the jumper needs to be changed.)

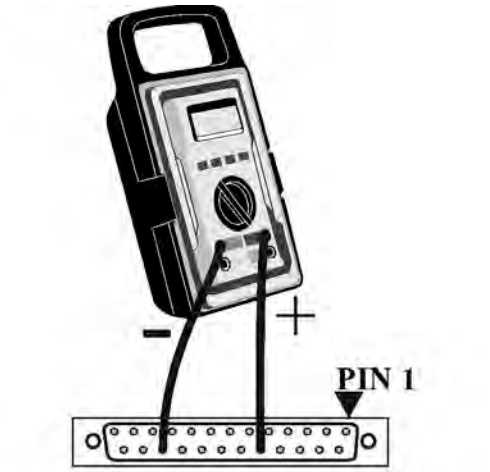

REAR OF CONNECTOR, CONNECT PINS 18 AND 23 FOR 0-2 VOLT OUTPUT. JUMPER IS SET TO 'V' or 1&2

Figure 1

Connection and Setup for 4-20mA output:

- The 4-20 mA active receivers connect as shown in Figure 2. The active receiver contains a voltage source to power the loop current. The receiver must have an isolated input circuit. That is, it must not be connected to ground or to a voltage source referenced to ground. Be sure that the analog jumper is set as follows:
  - Non-SMV units: SW101 is set to the "I" position before power is applied.
  - SMV units: JMP3 is set to pins 2&3 before power is applied.

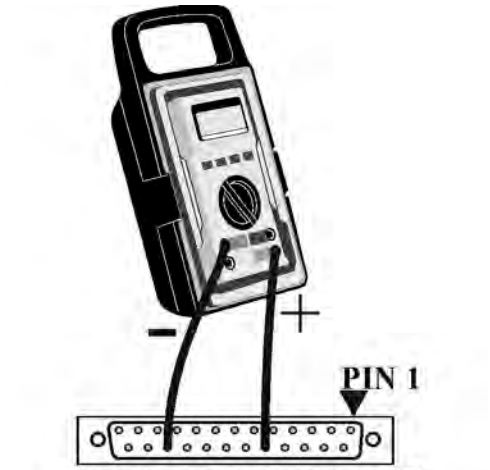

REAR OF CONNECTOR, CONNECT PINS 18 AND 23 FOR 4-20 mA OUTPUT. JUMPER IS SET TO 'I' or 2&3

Figure 2

- The 4-20 mA passive receivers do not contain a voltage source to power the loop current. They require the addition of a separate isolated power supply. Typically a supply that delivers 15 to 20 volts DC at 50 mA is sufficient. Wire these as in Figure 3. Note that some 12-volt DC wall transformers (as used on portable equipment) may deliver 15 to 20 volts when they are lightly loaded.

- Be sure that both the power supply used and the passive receiver are floating (not connected to earth ground). If either is not floating, the circuit will not work and damage may occur.

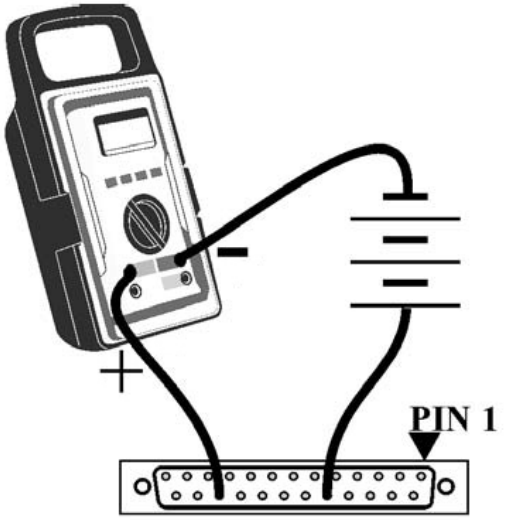

REAR OF CONNECTOR, CONNECT PINS 18 AND 23 FOR 4-20 mA OUTPUT.
JUMPER IS SET TO 'I' or 2&3
Figure 3

- Ensure that the analog jumper is set as follows:
  - Non-SMV units: SW101 is set to the "I" position before power is applied.
  - SMV units: JMP3 is set to pins 2&3 before power is applied.

Example Calculations:

- Example 1: Locked in Range 1 (0.10 to 1.00 ppm)
  - 631-X reading — Current
    - 0.10 ppm or less — 4mA
    - 1.00 ppm — 20mA
  - The formula relating the current to the concentration is:
    Concentration = [Range Maximum x (Current – 4)]/16
  - An output current of 12mA (in Range 1) corresponds to a concentration of 0.500 ppm:
    Concentration = [1.00 x (12 – 4)]/16 = 0.500 ppm

- Example 2: Locked in Range 2 (1.0 to 10.0 ppm)
  - 631-X reading — Current
    - 1.0 ppm or less — 4mA
    - 10.0 ppm — 20mA
  - The formula relating the current to the concentration is:
    Concentration = [Range Maximum x (Current – 4)]/16
  - An output current of 12mA (in Range 2) corresponds to a concentration of 5.00 ppm:
    Concentration = [10.0 x (12 – 4)]/16 = 5.00 ppm

Fresh Air Solenoid

An external three-way solenoid can be used to provide fresh air or conditioned air during sensor regeneration. This may be necessary if the sample stream lacks molecular oxygen. A low current six volt DC solenoid, connected between pins 19 and 11 of the 25 pin rear panel connector, will be energized during the regeneration cycle if the Option Functionality switch SW100 #6 is placed in the OFF position.

If needed, the circuit may be built from the following components and configured as shown in the following diagram. It will only function if the 631-X instrument has the Option Functionality.

Required Parts:	**Suggested Part**	**Similar AZI P/N**
1 solenoid, 6volt 3way	Angar P/N 407569	1300 1004
1/8” to 1/16” tubing adaptor	Any	1300 0025
1/2” clamp, adhesive mount	Any	6000 0013
1/8” tube to instrument adaptor	Any	1400 3010
3” 1/8” clear tubing	Tygon® Formula 2375	345-0050
A/R 1/16” clear tubing (for adjacent solenoid ports)	Tygon® Formula 2375	345-0244
A/R 1/16” black tubing (for lone solenoid port)	Tygon® Fluran	345-0257
1 25 pin male DB-25 connector Solder-cup style	AMP 747912-2	None *
1 connector hood	AMP 749626-2	None *

* These are types not stocked by AZI, but should be available overnight from many AMP stocking distributors such as Digi-Key Corporation. There are multiple suitable alternatives such as Radio Shack’s 276-1547 and 276-1549.

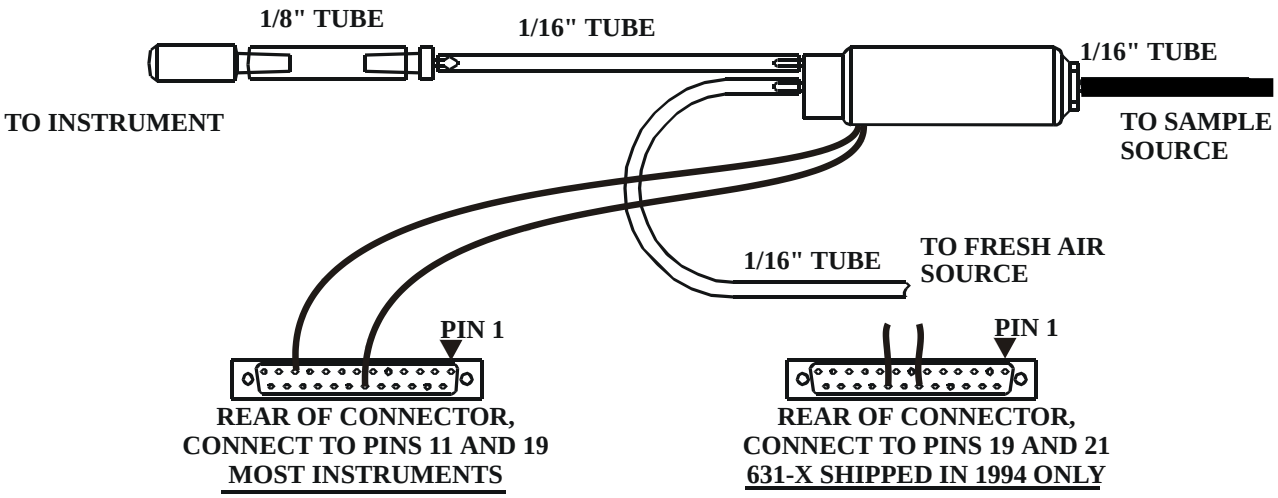

DC Power Operation

Instruments with the 631-X Option Functionality can be used with any +12 VDC source for continuous operation, if the AZI Power Inverter Kit, P/N Y031 0902 is purchased. To preserve the life of the DC power source, usually a car or truck battery, the power inverter will switch on automatically to supply the AC necessary for regeneration only. The external switch on the inverter should always be OFF to preserve battery life during normal sampling.

To work with the power inverter kit, place Option Functionality switch SW100 DIP #6 to the ON position.

DC Power Adaptor Kit, AZI P/N Y031 0902

- The DC power adaptor kit consists of:
  - DC Power Adaptor, P/N 1000 0089
  - DC Power Inverter, P/N 4000 1021
  - DC Power Cable Assembly, P/N 6000 1093

Installation

- Ensure that the instrument's Option Functionality switches are set correctly for the intended operation with the SW100 DIP #6 set to "ON" for DC operation.
- Mount the DC Power Adaptor board (AZI# 1000 0089) to the rear of the instrument and tighten the mounting screws.
  - On Non-SMV instruments, mount the external Data Logger on the Adaptor board.
- Place or mount the DC/AC power inverter in a secure position near the instrument.
- Connect the cable from the DC/AC power inverter to the matching connecter on the interface board. Note that the connectors are keyed to prevent improper connection.
- Plug the instrument's AC power cord into the power inverter and connect it to the instrument.

When the instrument starts a regeneration with Option Functionality switch SW100 DIP #6 ON, the instrument sends a signal to close the relay on the DC Power Adaptor board. This switches the power inverter ON using the inverter's internal switch.

NOTE: When this mode is enabled, Non-SMV instruments do NOT check for 115 VAC for the regeneration. If there is no AC power to the instrument, and a regeneration is initiated, the instrument will flash .H.H.H (rather than .P.P.P), however the sensor will not heat, nor will the sensor be cleaned.

Ensure that the inverter's power switch is in the "OFF" position. LEAVE the power switch in the "OFF" position at all times. The interface board will activate the inverter when necessary. If the inverter power switch is placed in the "ON" position, it will cause a continuous drain on the external 12-volt power system.

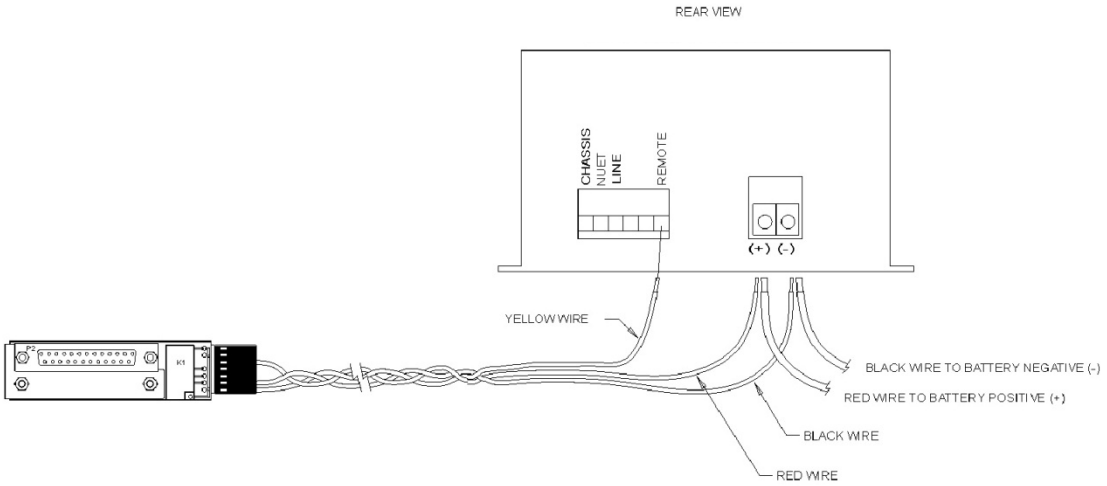

- Due to the wide variety of applicable DC power sources, the battery wires are not supplied. Refer to the manual supplied with the inverter for proper battery wire sizing and connections.
- Connect cables from the external 12-volt power source and the DC power cable assembly to the appropriate positive (+) and negative (-) terminals on the inverter as shown in the diagram above.
- Connect the yellow wire from the DC power cable to the "REMOTE" terminal on the power inverter as shown in the diagram above.
- If the external 12volt lines are not powered, power them now. (Connect them to the battery)
- Connect the instrument's AC power cord between the instrument and the front of the power inverter.
- Turn the instrument "ON." (Note, the external 12V supply will also charge the instrument internal battery).
- Press the "REGEN" switch on the instrument. Inverter operation can be verified in either of two ways:
  - Immediately after pressing "REGEN" the inverter will intermittently "sing." This tone slowly becomes nearly continuous and then ends after 64 seconds.
  - If the area is noisy, use a voltmeter to verify that approximately 115 volts is present for about 64 seconds, starting when the "REGEN" switch is pressed.

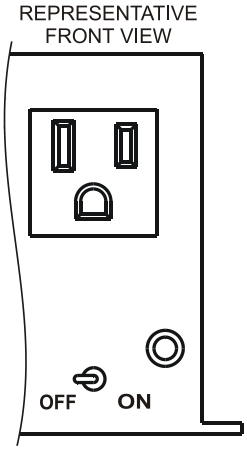

- Allow the instrument to complete its regeneration before turning it off.
- With the instrument turned off, complete the installation (i.e. connect or activate Data Logger, communications cables, or other devices and ensure that the DIP switches for the instrument and Option Functionality are set correctly).

15. WARRANTY

Arizona Instrument LLC (seller) warrants to buyer that Jerome® products delivered pursuant to this agreement shall, at the time of delivery, and for a period of one (1) year thereafter (the Internal Battery Pack, where applicable, is warranted for a period of ninety [90] days only), to be free from defects in material or workmanship and shall conform to seller's specifications or such other specifications as seller has agreed to in writing. Seller's obligations with respect to claims under this warranty shall be limited, at seller's option, either to the replacement of defective or non-conforming product or to an appropriate credit for the purchase price thereof subject to the provisions of seller's Warranty Policy as amended from time to time, said Policy being incorporated herein by reference. All defective parts replaced by AZI become the property of AZI.

Returned products under warranty claims will be shipped to seller's plant by buyer at buyer's expense and shall be accompanied by a statement of the reason for the return and an approved Return Material Authorization Number issued by seller. Buyer remains responsible for payment for products not accepted for warranty adjustment, handling costs, and freight costs associated therewith.

Notwithstanding the foregoing, no warranty shall be enforceable in the event that product has been subjected to environmental or stress testing by buyer or any third party without written approval of seller prior to such testing. Further, no warranty shall be enforceable if the alleged defect is found to have occurred because of misuse, neglect, improper installation, repair, alteration, accident, or improper return handling procedure by buyer.

Discontinued product is warranted only for a credit or replacement at seller's option.

THE EXPRESS WARRANTIES GRANTED ABOVE SHALL EXTEND DIRECTLY TO BUYER AND NOT TO BUYER'S CUSTOMERS, AGENTS, OR REPRESENTATIVES AND, EXCEPT FOR WARRANTY OF TITLE, IS IN LIEU OF ALL OTHER WARRANTIES, WHETHER EXPRESSED OR IMPLIED, INCLUDING ANY IMPLIED WARRANTIES OF FITNESS FOR A PARTICULAR PURPOSE AND MERCHANTABILITY, SUCH OTHER WARRANTIES BEING SPECIFICALLY DISCLAIMED BY SELLER. IN NO EVENT SHALL EITHER PARTY'S LIABILITY FOR ANY BREACH OR ALLEGED BREACH OF THIS AGREEMENT EXCEED THE TOTAL EXTENDED PRICE OR PRICES SHOWN ON UNFILLED ORDERS, NOR SHALL EITHER PARTY BE LIABLE FOR ANY SPECIAL, INCIDENTAL OR CONSEQUENTIAL DAMAGES RESULTING FROM BREACH OR ALLEGED BREACH.

Notwithstanding the foregoing, if any product covered by order(s) placed hereunder is designated as "developmental," "prototype" or "experimental," no warranty whatsoever except a warranty of title to component materials, will be applicable thereto and buyer shall indemnify seller for any claims for liability asserted seller in connection therewith.

The foregoing state the entire liability of seller in connection with products supplied hereunder.

TRADEMARK AND COPYRIGHT PROTECTION

Jerome®, Arizona Instrument®, AZI® and the stylized AZI are all registered trademarks of Arizona Instrument LLC.

Instrument firmware is copyright protected.
All specifications subject to change without notice.

Copyright 1990-2017 Arizona Instrument LLC. All Rights Reserved.

Acrodisc® is a registered trademark of Pall Gelman Sciences, Inc.
Resisorb® is a registered trademark of Avantor Performance Materials.
AddSorb® is a registered trademark of Jacobi Carbons.
Tygon® is a registered trademark of Saint-Gobain Performance Plastics Corporation.
Windows® is a registered trademark of Microsoft Corporation in the United States and other countries.

Arizona Instrument LLC
Jerome® 631-X Hydrogen Sulfide Analyzer Operation Manual
Part Number 700-0037

If you have any questions regarding the operation of this instrument, please call our toll free number (800) 528-7411. Internationally, call (602) 470-1414 or fax (480) 804-0656.

Appendix D

Daily Odor Inspection Log

Daily Odor Inspection Log
Keegan Landfill

Date: _____

Inspector: _____ Inspection Start time: _____

Weather Conditions: _____ Inspection End time: _____

_____

Note on figure below areas of odors, stressed vegetation, staining, erosion rills, other

Describe Action taken to remediate odor, if applicable:

Date/Time of recheck:

If odors are noted above, document weather data from main Weather Station at start time of inspection:

Wind Direction _____

Wind Speed _____ From Nearest Monitoring Station:

Temperature _____ Wind Direction _____

Barometric Pressure _____ Wind Speed _____

Precipitation

Signature of Inspector: Date:

Appendix E

Action Level Exceedance Investigation Form

Monitoring Station Exceedance Investigation Log
Keegan Landfill

Date: _____

WARNDEP Log # _____ Time WARNDEP called: _____

Inspector: _____ Inspection Start time: _____

Inspector Affliation: _____

Monitoring Station with Exceedance: _____

Wind Direction _____

Weather Conditions _____

Are odors present in vicinity of Monitoring Station with Exceedance? _____

If yes, describe odor and investigate area for potential odor source:

Verify operation of monitoring equipment _____

If not functioning contact Emilcott (log date, time, contact) _____

Document Landfill operations:

Equipment operating: _____

Active disposal area: _____

Waste loads/types being disposed: _____

Other:

Inspect Perimeter of Landfill, describe other areas with odors detected:

Describe Action taken to remediate odor, if applicable:

Document weather data from main Weather Station at start time of investigation:

Wind Direction _____

Wind Speed _____

Temperature _____

Barometric Pressure _____

Precipitation

From Monitoring Station with exceedance:

Wind Direction _____

Wind Speed _____

Signature of Inspector: Date: