Install: Pintle Ball-Hitch

Part Number: S-2302BUA00051N

WORK INSTRUCTION OVERVIEW

⚠WARNING

- *DO NOT ATTEMPT THIS PROCEDURE IF YOU DO NOT HAVE PROPER TOOLS, TRAINING, AND FACILITIES.*
- *Never consider using a two-post lift that is not certified according to ANSI/ALI ALCTV-2011 or ANSI/UL 201. (autolift.org)*
- *Read and follow all instructions provided when installing this product. Failure to do so may result in placing occupants at risk of serious injury or death.*
- *To protect bystanders and the service technician(s), shut vehicle off, remove the Ignition Key and secure vehicle to prevent unintended movement.*

TOOLS REQUIRED

○ 13 mm Socket	○ 15 mm Wrench
○ 15 mm Socket	○ 16 mm Wrench
○ 16 mm Socket	○ Torque Wrench (N•m)
○ Socket Driver	○ Protective Eye-wear

TORQUE SPECIFICATION

Tighten each fastener to the torque specification below:

- **M8 using Flange Nuts** – 20.0 N•m
- **M8 using Welded Nuts** – 30.0 N•m
- **M12 Bolts** – 65.0 N•m

KIT COMPONENT TABLE

Component	Description	Qty
	Pintle Hitch	1
	Pintle Hitch Mounting Plate	1
	M12x40 Hex Flange Bolts	4
	M8x25 Hex Flange Bolts	12
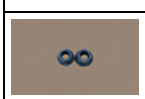	M12 Hex Flange Nuts AMPT	2
	M8 Hex Flange Nuts AMPT	4

INSTALLATION PROCEDURE

1. Shipped from the manufacturer of the pintle hitch, are a set of fasteners that **do not apply** for the pintle hitch installation on the ROXOR. Please find them in the pintle hitch box, then discard. The applicable fasteners are located outside this box and are detailed within the kit component list in the previous section.

2. Line up plate and partially hand thread (2) M12 bolts to hold plate in place.

3. Lightly tighten (8) M8 Bolts.

CONFIDENTIAL DOCUMENT
© 2021 Mahindra Vehicle Sales and Service, Inc. All Rights Reserved.
ROXOR is a registered trademark of Mahindra Vehicle Sales and Service, Inc.

MAHINDRA VEHICLE SALES AND SERVICE, INC.

Install: Pintle Ball-Hitch

Part Number: S-2302BUA00051N

4. Finger tighten (4) M8 bolts and (4) M8 hex flange nuts.

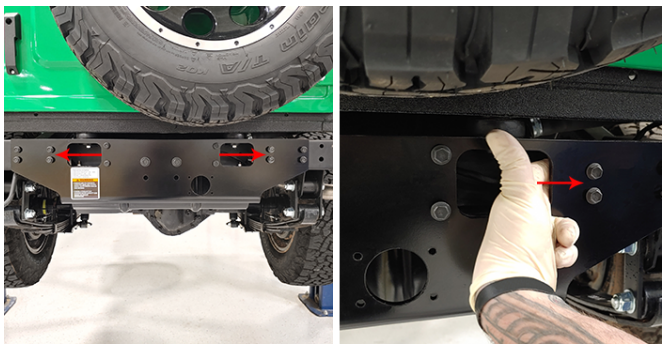

5. To install pintle hitch:
   - Install (2) M12 hex flange bolts into welded nuts. Torque to specification.
   - Install (2) M12 hex flange bolts with (2) M12 hex flange nuts.
   - Torque bottom bolts while counter-holding M12 hex flange nuts.

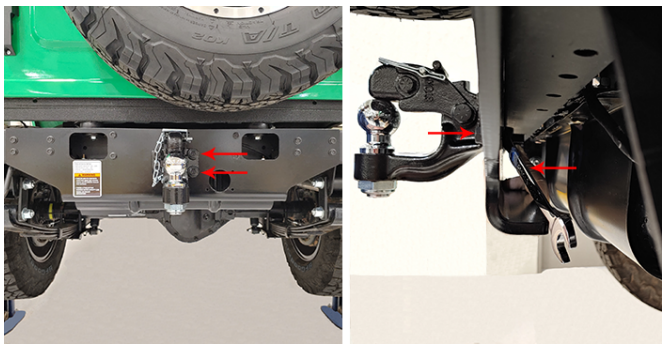

6. When torquing remaining bolts, torque from inside to out, alternating from 1's, 2's (counter-holding) and then lastly 3's.

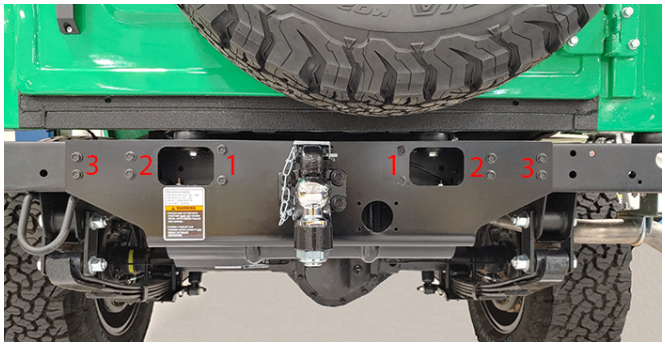

CONFIDENTIAL DOCUMENT
© 2021 Mahindra Vehicle Sales and Service, Inc. All Rights Reserved.
ROXOR is a registered trademark of Mahindra Vehicle Sales and Service, Inc.

Mahindra
MAHINDRA VEHICLE SALES AND SERVICE, INC.