MT3215G HEAVY DUTY COMPOSITE AIR SAW

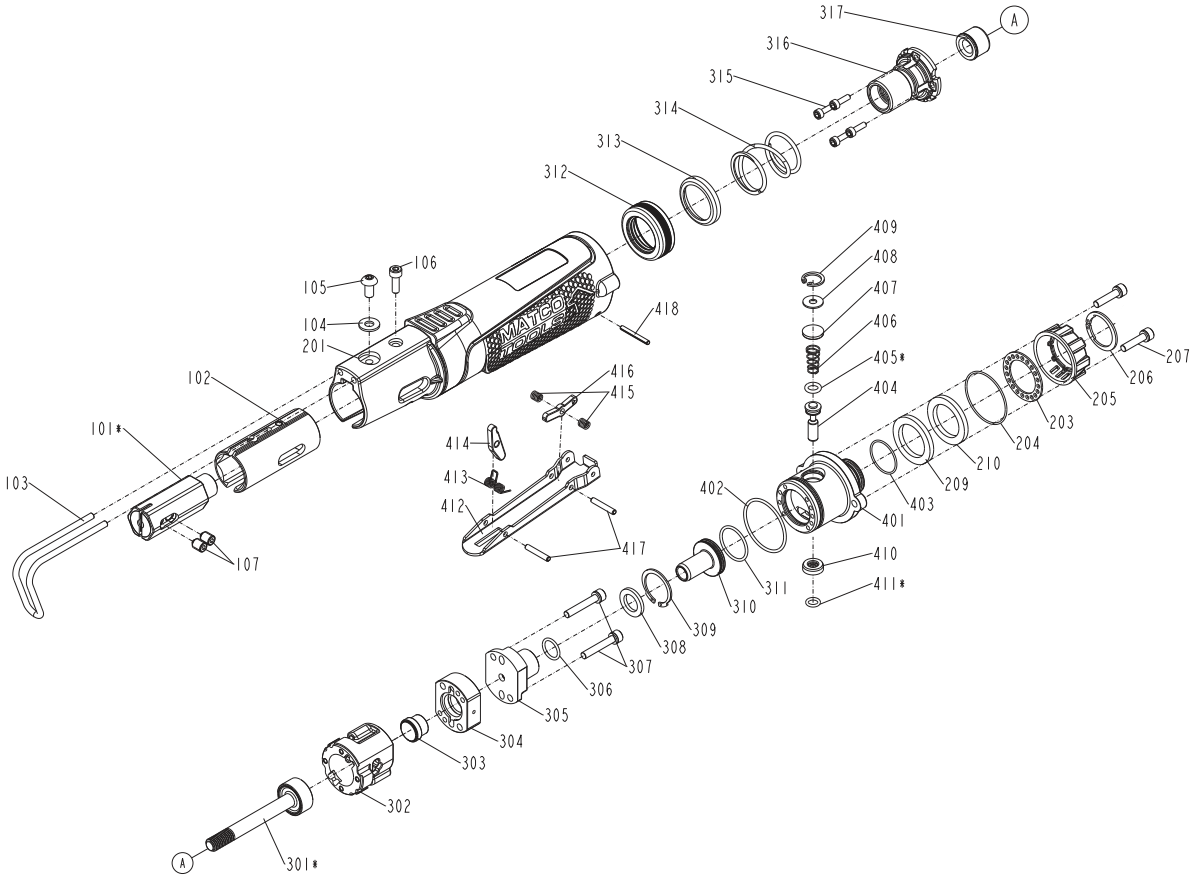

Index #	Part #	Description	Qty.
101	RS3215101	COLLET ASSEMBLY	1
102	RS9500102	BLADE GUIDE HOLDER	1
103	RS9500103	GUARD BLADE	1
104	RS2215104	FLAT WASHER	1
105	RS9500105	HALF ROUND HD.HEX.BOLT	1
106	RS9500106	HEX.SOC.HD.BOLT	1
107	RS9500107	SPECIAL SCREW (EACH)	2
201	RS3215201G	HOUSING ASSEMBLY - GREEN	1
203	RS9500203	MUFFLER CAP	1
204	RS9500204	O - RING	1
205	RS3215205	DEFLECTOR	1
206	RS9500206	EX-CONCENTRIC RING	1
207	RS4135303	BOLT ASSY (EACH)	2
209	RS9500209	MUFFLER	1
210	RS9500210	MUFFLER A	1
301	RS9500301	PISTON SHAFT UNIT	1
302	RS9500302	CYLINDER	1
303	RS9500303	DISCHARGE SHEET	1
304	RS9500304	VALVE ASSEMBLY	1
305	RS9500305	VALVE UNIT	1
306	RS1719205	O - RING	1
307	RS9500307	BOLT ASSY (EACH)	2
308	RS9500308	FEED BUMPER B	1
309	RS9500309	IN-CONCENTRIC RING	1
310	RS9500310	GUIDE BUSH FOR INLET VALVE	1
311	RS9500311	O - RING	1

Index #	Part #	Description	Qty.
312	RS9500312	OIL SEAL	1
313	RS9500313	SPRING BASE	1
314	RS9500314	SPRING	1
315	RS6215309	HEX.SOC.HD.BOLT (EACH)	4
316	RS9500316	MAGAZINE UNIT A	1
317	RS9500317	FEED BUMPER A	1
401	RS9500401	END CAP	1
402	RS9500402	O - RING	1
403	RS2638311	O - RING	1
404	RS9500404	VALVE STEM	1
405	RS9500405	O - RING	1
406	RS2215404	VALVE STEM SPRING	1
407	RS9500407	VALVE SEAL	1
408	RS9500408	FLAT WASHER	1
409	RS9500409	C - RING	1
410	RS9500410	LINING RING-THROTTLE VALVE	1
411	RS1734202	O - RING	1
412	RS9500412	TRIGGER	1
413	RS9500413	SPRING	1
414	RS9500414	SAFETY	1
415	RS9500415	POSITIONING SPRING (EACH)	2
416	RS9500416	SECONDARY TRIGGER	1
417	RS1837109	SPRING PIN (EACH)	2
418	RS1044411	SPRING PIN	1
NS	RSMT3215GPWL	PRODUCT WARNING LABEL	1