Angle Grinder

GWS 13-50 VSP | 3 601 G9H 410

Table of Content

Spare parts list.....2

Illustration - Type.....4

Robert Bosch Power Tools GmbH
Max-Lang-Strasse 40-46
DE-70771 Leinfelden-Echterdingen
https://www.boschtoolservice.com

Spare parts list

Item	Part Number	Description	Illustration	Price	Quantity	Price Group
2	1 604 220 479	Field 110-127V	1	$22.00 *	1	32
3/13	2 600 905 032	Ball Bearing 7x19x6	1	$2.58 *	1	15
4	1 607 200 35A	Switch	1	$7.57 *	1	22
5	1 604 460 336	Power supply cord USA/CAN/SMA 2,68m 2 x 1,31mm SJ 16/2	1	-	1	
6	1 600 703 043	Grommet	1	$1.70 *	1	13
7	1 601 302 017	Fastening Clamp	1	$1.12 *	1	11
9	1 601 11C 0KH	Manufacturer's nameplate GWS 13-50	1	$1.36 *	1	12
14	1 600 905 032	groove ball bearing 8x22x7	1	$4.31 *	1	18
25	1 605 108 292	Housing Section	1	$6.57 *	1	21
27	1 600 206 025	Rubber Ring	1	$1.12 *	1	11
29	1 600 591 047	Air-Deflector Ring	1	$1.36 *	1	12
30	1 600 591 048	Air Distributor	1	$2.01 *	1	14
33	1 600 210 035	O-Ring 46,0x1,1 MM	1	-	1	
35	1 600 136 013	Shim 0,1 MM THICK	1	$1.70 *	1	13
35	1 600 136 014	Shim 0,2 MM THICK	1	$1.70 *	1	13
35	1 600 136 015	Shim 0,3 MM THICK	1	$1.70 *	1	13
35	1 600 136 020	Shim 0,15 MM THICK	1	$1.70 *	1	13
37	1 600 290 016	Rotary shaft lip seal	1	$1.36 *	1	12
40	1 600 119 011	Retaining clip	1	$1.36 *	1	12
41	1 600 200 029	Plain bearing	1	$1.36 *	1	12
45	1 603 300 016	Hex Nut M7, SW10	1	$1.12 *	1	11
49	2 914 491 410	Thread-forming tap. Screw M4x16	1	$0.68 *	4	10
50	1 603 435 078	Torx Oval-Head Screw	1	$0.68 *	1	10
54	1 603 414 026	Torx Oval-Head Screw 4x30	1	$0.68 *	1	10
55	2 603 490 021	Torx Oval-Head Screw 4x12	1	$0.68 *	3	10
58	1 604 617 012	Compression Spring	1	$0.68 *	1	10
59	1 602 002 015	Locking Lever	1	$0.68 *	1	10
60	1 602 026 095	Reverse-Transfer Lever	1	$0.68 *	1	10
61	2 917 890 086	Straight Pin	1	$0.68 *	1	10
301/17	1 604 652 021	Spiral Spring	1	$0.68 *	2	10
301/48	1 613 435 034	Lens Head Screw 3x10 ST	1	$0.68 *	2	10
302/104	1 600 210 044	O-Ring 4,5x1,0 MM BLUE	1	$1.12 *	1	11
343	1 607 000 742	Catch Lever	1	$5.72 *	1	20
343/44	1 604 611 042	Compression Spring	1	$1.12 *	1	11

* Prices shown are suggested retail prices

Robert Bosch Power Tools GmbH
Max-Lang-Strasse 40-46
DE-70771 Leinfelden-Echterdingen
https://www.boschtoolservice.com

Spare parts list

Item	Part Number	Description	Illustration	Price	Quantity	Price Group
801	1 607 000 D99	Motor Housing	1	-	1	
803	1 607 000 V65	Armature 120V	1	$70.00 *	1	43
810	1 607 000 V61	Carbon-Brush Set	1	$9.84 *	1	24
813	1 607 000 V38	groove ball bearing	1	$5.72 *	1	20
816	1 607 000 V43	Brush Holder	1	$2.58 *	2	15
818	1 607 000 505	Switch-Pawl	1	$5.72 *	1	20
821	1 607 000 V40	Gear Housing	1	$24.00 *	1	33
828	1 607 000 D65	Bearing Flange	1	$24.00 *	1	33
828/04	3 600 210 109	O-Ring 47,0x1,5 MM	1	$1.12 *	1	11
835	1 606 610 132	Fan	1	$1.36 *	1	12
840	1 607 000 V41	Push-Button	1	$2.58 *	1	15
851	1 607 233 5DN	Speed governor	1	$34.00 *	1	36
852	1 607 000 V42	Pan head screw	1	$0.68 *	1	10
650/1	1 602 025 052	Auxiliary Handle M10 ANTI-VIBRATION	2	$19.50 *	1	31
650/2	1 605 703 140	Clamping-Flange	2	$6.57 *	1	21
650/2/2	1 600 210 253	O-Ring	2	$2.58 *	1	15
650/3	1 607 950 052	Pin-Type Face-Wrench	2	$2.58 *	1	15
650/5	3 603 340 503	Round Nut 5/8"	2	$8.70 *	1	23
651	1 600 A00 XL5	Protective Cover	2	-	1	
808	1 601 11A 210	Nameplate	2	$1.36 *	1	12

* Prices shown are suggested retail prices

Robert Bosch Power Tools GmbH
Max-Lang-Strasse 40-46
DE-70771 Leinfelden-Echterdingen
https://www.boschtoolservice.com

Illustration - Type - E

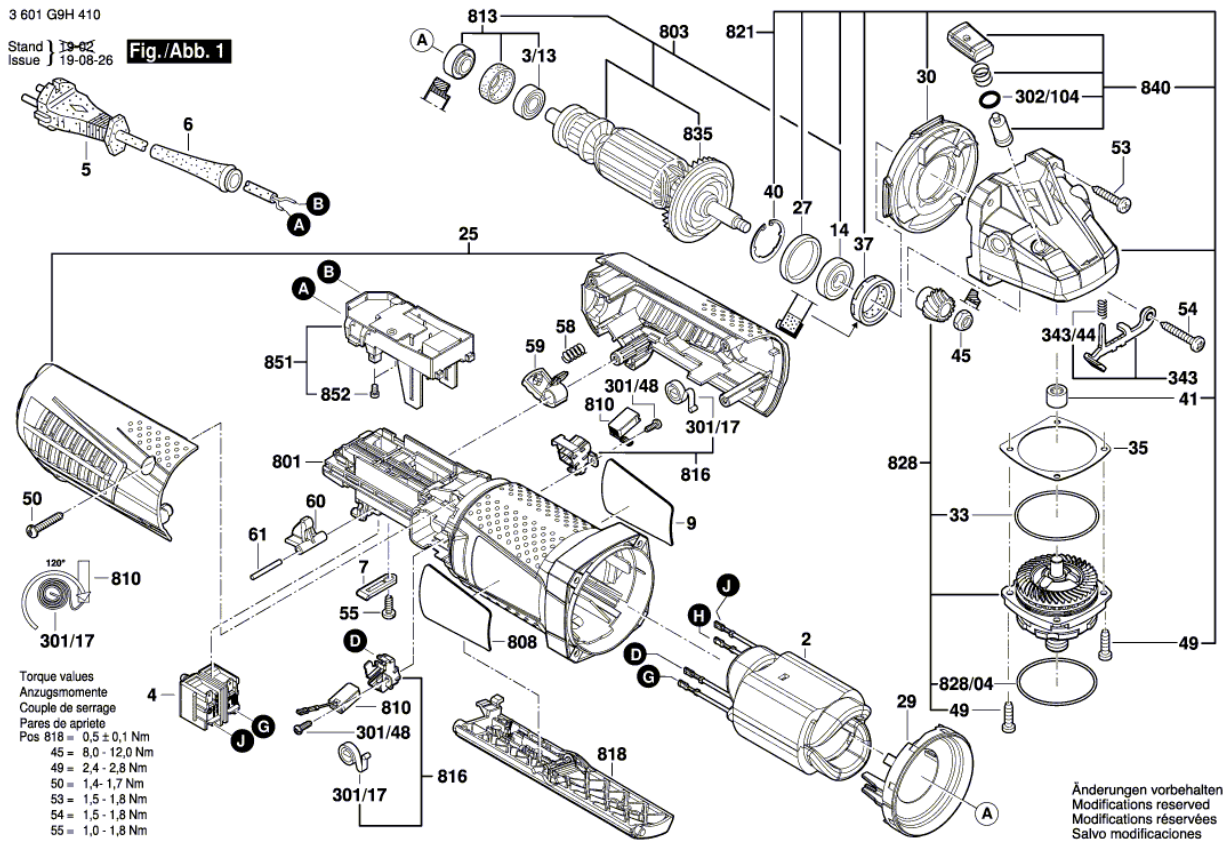

Robert Bosch Power Tools GmbH
Max-Lang-Strasse 40-46
DE-70771 Leinfelden-Echterdingen
https://www.boschtoolservice.com

Illustration - Type - E

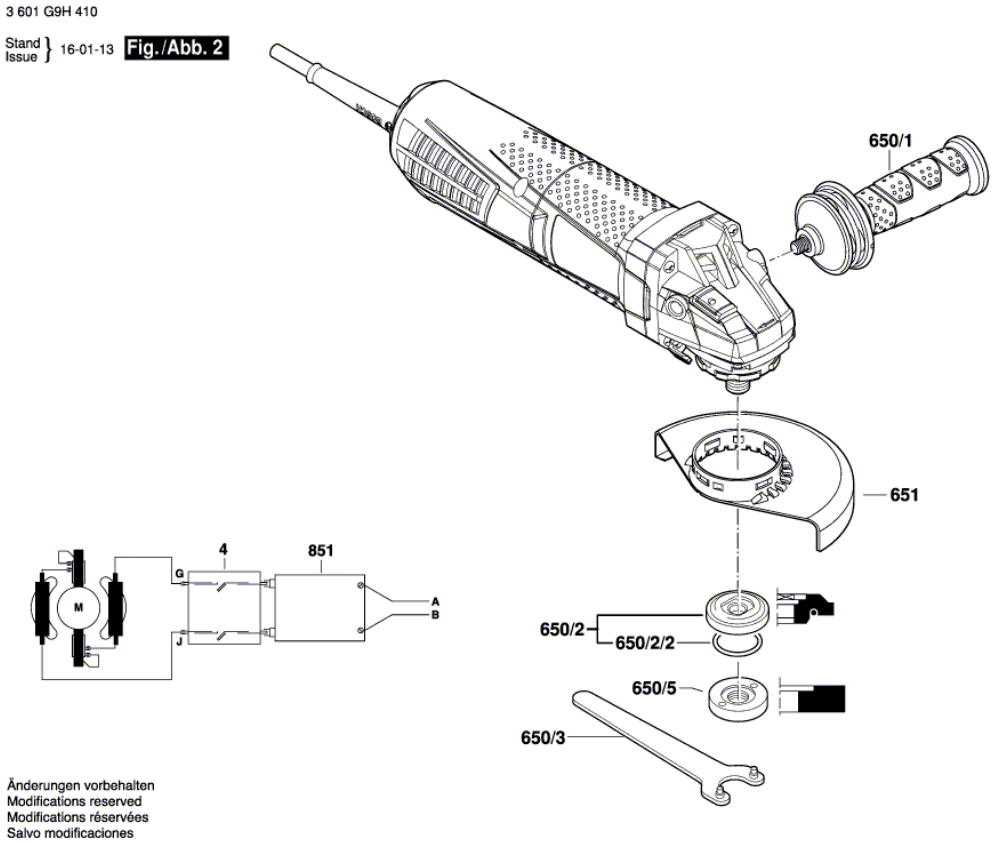

Robert Bosch Power Tools GmbH
Max-Lang-Strasse 40-46
DE-70771 Leinfelden-Echterdingen
https://www.boschtoolservice.com