MODEL UT 8763
7" Angle Grinder

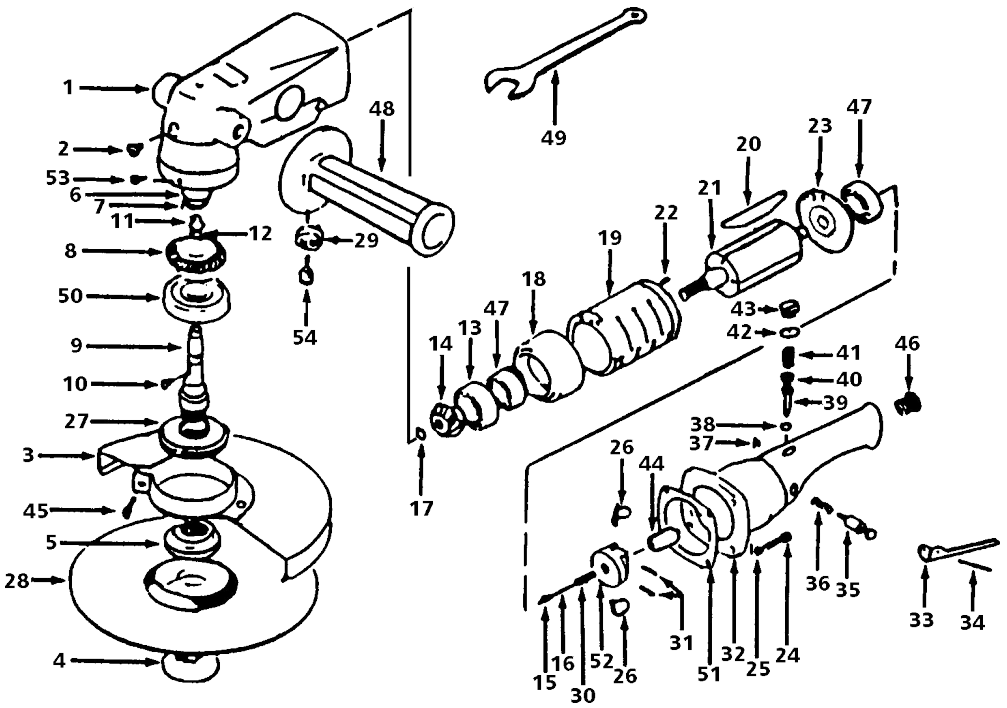

Parts List

Ref. No.	Description	Part No.
1	Body	8900304
2	Head screw	8732344
3	Disc cover	707110
4	•Disc nut	8900658
5	Disc receiver	8900657
6	Spacer	8900308
7	Ball bearing	8900309
8	Bevel gear	8900311
9	Gear shaft	8900656
10	Key	8900313
11	Retaining ring	8729290
12	Wave washer	8729489
13	Ball bearing	8900314
14	Bevel pinion	8900315
15	Adjust nut	8900316
16	Adjust screw	8900317
17	Retaining ring	8900238
18	Front case	8900318
19	Cylinder	8900319
20	•Rotor blade (4)	8900320
21	Rotor	8900321
22	Cylinder pin	8900058
23	Rear case	8900322
24	Screw (4)	8900325
25	Washer (4)	8729035
26	Pendulum (4)	8900326
27	Bearing screw	8900323
28	NLA	

Ref. No.	Description	Part No.
29	Exhaust cover	8900344
30	Spring	8900329
31	Pin (2)	8900330
32	Handle body	8900345
33	Throttle lever	8900346
34	Lever pin	8900347
35	Safety lock	8900349
36	Spring	8900348
37	Snap ring	8900350
38	•O-ring	81008127
39	Valve stem	8900352
40	O-ring retainer	8900432
41	Spring	8732154
42	•O-ring	8729263
43	Valve plug	8732152
44	Plunger	8900328
45	Cover screw	8900339
46	Inlet bushing	8900351
47	Ball bearing (2)	8732360
48	Dead handle	8729284
49	Wrench (11/16" open)	707112
50	Ball bearing	8900310
51	•Gasket	8900337
52	Governor	8900327
53	Set screw	8900342
54	Cap screw	8900343
(D)	Not included with tool	
(•)	Recommended items for tune-up	