⚠ PLEASE READ AND FOLLOW ALL WARNINGS ⚠

Universal Tool

UT300V-60-6
6" VERTICAL GRINDER

Read Operating Instructions
Always become familiar with all the instructions and warnings before operating any power tool.

Always Wear Approved Eye Protection
Impact resistant eye protection should meet or exceed the standards as set forth in the United States ANSI Z87.1, Occupational and Educational Eye and Face Protection. Look for the marking Z87.1 on your eye protection to insure that it is an approved style. For further information, ANSI Z87.1, Occupational and Educational Eye and Face Protection, is available from the American National Standards Institute, Inc., 11 West 42nd Street, New York, NY 10036.

Hearing Protection is Recommended
Hearing protection should be used when the noise level exposure equals or exceeds an 8 hour time-weighted average sound level of 85 dBA. Process noise, reflective surfaces, other tools being operated nearby, all add to the noise level present in your work area. If you are unable to determine your noise level exposure, we recommend the use of hearing protection.

Avoid Prolonged Exposure to Vibration
PnuematicTools can vibrate during use. Prolonged exposure to vibration or very repetitive hand and arm movements, can cause injury. Stop using any tool if discomfort, tingling feeling or pain occurs. You should consult your physician before resuming use of the tool.

90 PSIG Maximum
This tool is designed to operate at an air pressure of 90 pounds per square inch gauge pressure (90 PSIG) maximum, at the tool. Use of higher air pressure can, and may cause injury. Also, the use of higher air pressure places the internal components under loads and stresses they were not designed for, causing premature

WARNING:
Some dust created by power sanding, sawing, grinding, drilling, and other construction activities contains chemicals known to cause cancer, birth defects or reproductive harm. Some examples of these chemicals are:

- Lead from lead-based paints
- Crystalline silica from bricks, cement and other masonry products
- Arsenic and chromium from chemically treated lumber

Your risk from these exposures varies, depending on how often you do this type of work. To reduce your exposure to these chemicals, work in a well-ventilated area and work with approved safety equipment such as those dust masks that are specially designed to filter out microscopic particles.

Use Accessories Rated at Tool RPM or Higher

Always use grinding wheels with an RPM rating that meets or exceeds the tool RPM rating. Always examine wheels for chips, cracks or signs of damage before mounting. Never use grinding wheels that have been dropped or exposed to: water, solvent or extreme temperature changes. The grinder's speed should be checked with a tachometer before mounting a wheel; after all repairs and whenever the

⚠CAUTION

All depressed center wheel , cup wheel, and horizontal wheel gringers must be used with wheel guards. Grinders must be disconnected from the air supply when mounting or removing any wheel or adjusting the wheel guard. After properly mounting the wheel and guard, the grinder should be brought up to full speed and run for at least one minute in a protected enclosure.

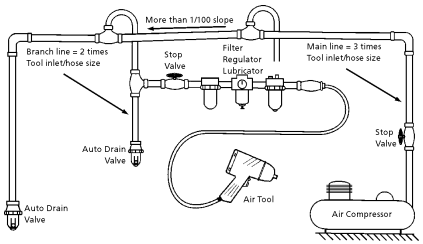

Description

The Universal Tool Grinders are designed for material removal in foundry and metal fabrication. All UT Grinders feature powerful direct drive motors and centrifugal speed control governors to maintain RPM under heavy loads.

Safety Instructions
The following instructions are furnished as general guidelines for use of your pneumatic tool. They cannot comprehensively cover all possible or conceivable uses of the subject tool. For additional information on the safe use of air tools, we advise you to obtain a copy of ANSI B186.1 Safety Code for Portable Air Tools, available from the following source:

American National Standards Institute, Inc.
11 West 42nd Street
New York, NY 10036.

The use of the word "shall" in the following instructions, indicates that adherence to the particular requirement is necessary to conform to ANSI B186.1.

Tool Application and Usage
Pneumatic tools shall be used only for the purposes intended in their design and within the capacity for which they were intended and rated. It shall be the tool owner's and/or employer's responsibility to instruct each operator in the safe use of the tool. Tools shall not be used without guards and safety devices as furnished by the manufacturer. Where an air tool is modified or altered, the modifier shall provide the safeguards to enable it to be safely used in the operations intended and to comply with any applicable provisions as contained in ANSI B186.1.

Tool Installation
Pressure regulators shall be used to limit air pressure to the rated pressure where the supply pressure exceeds the tool's rated pressure. Air hoses and lines shall be relieved of compressed air before being disconnected or disjointed, unless there is automatic valve closing protection at the joint being separated. Synthetic lubricants which can cause deterioration of elastomer seals shall not be used in air systems of air tools.

Tool Maintenance (Fitting Wheels and Guards)
It shall be the tool owner's and/or employer's responsibility to assure that tools are maintained in a safe operating condition. Tool maintenance and repair shall be performed by authorized, trained, competent personnel. Tools shall be disconnected from their compressed air supply before any repairs or fitting of wheels and guards are attempted. Repairs shall be consistent with the manufacturer's recommended procedures. Tool, hoses and fittings shall be replaced if unsuitable for safe operation. It shall be the tool owner's and/or employer's responsibility to keep required rating markings and warnings on the tool in legible condition.

Universal Tool
A Division of Florida Pneumatic Manufacturing Corporation
851 Jupiter Park Lane, Jupiter, Florida 33458
Toll Free 1-800-327-9403

Read these instructions carefully before attempting to install, operate or service this Florida Pneumatic product. Failure to comply with the instructions could result in personal injury and/or property damage! Retain these instructions for future reference.

FPMC

Universal Tool

UT300V-60-6
6" VERTICAL GRINDER

Specifications:

Horse Power..... 3.0 HP
Speed.....6,000 RPM
Max. Wheel Dia.....6"
Weight.....7.4 lbs.
Overall length.....5.5 in.
Average air consumption.....13 CFM
Recommended hose size.....1/2" I.D.
Air inlet.....3/8" NPT
Maximum operating pressure .....90 psi

Parts Breakdown for UT300V-60-6

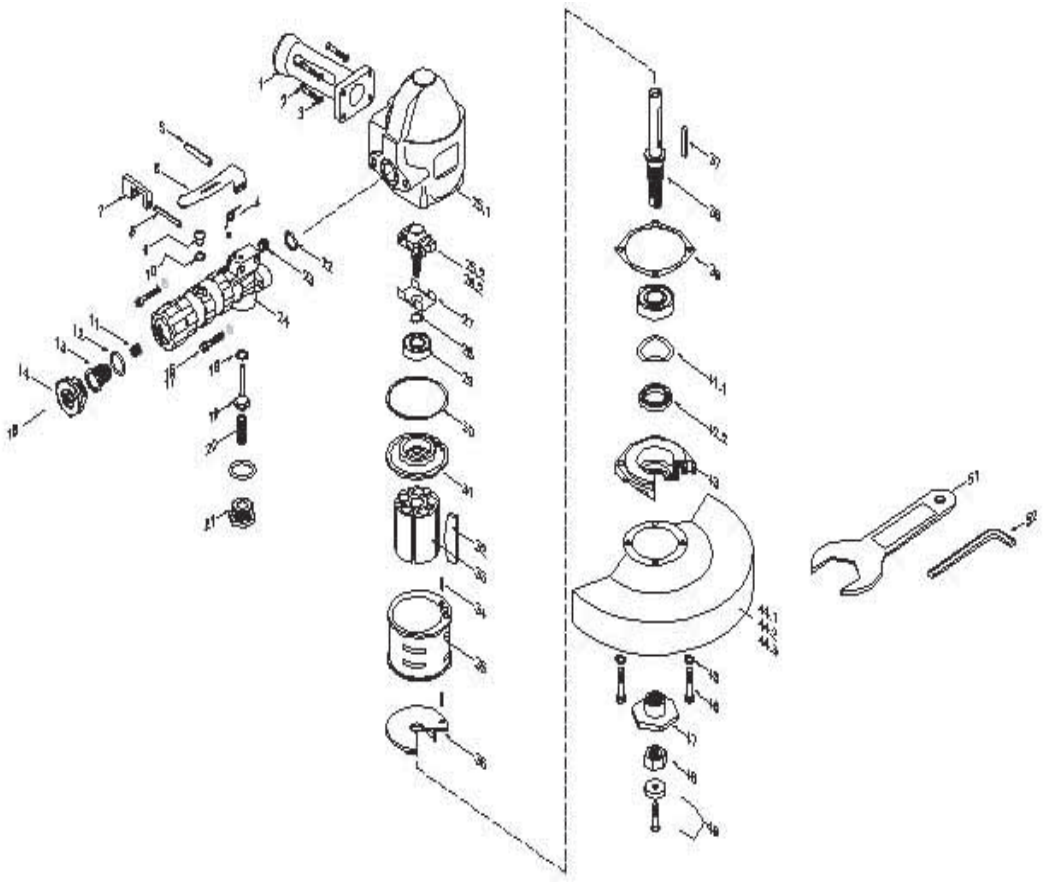

Universal Tool

UT300V-60-6
6" VERTICAL GRINDER

Replacement Parts for UT300V-60-6

INDEX#	PART#	DESCRIPTION
1	550-1C	ASSIST HANDLE
2	550-48	ASSIST HANDLE BOLT
3	550-54	ASSIST HANDLE WASHER
4	650-55	LOCKOUT SPRING
5	550-50	LEVER PIN
6	550-38	LEVER
7	650-56	LOCKOUT
8	600-54	LOCKOUT PIN
9	700-23	OILER PLUG
10	832636	OILER SEAL
11	400-33P	OIL REGULATOR
12	650-61	AIR SCREEN O-RING
13	650-35	AIR SCREEN
14	550-33	INLET CAP
15	AA-650-1-ALS	SAFETY THROTTLE HANDLE ASSY. (INCL. # 4, 5, 6, 7, 8, 9, 10, 11, 12, 13, 14, 18, 19, 20, 21, 23, 24)
16	700-48	THROTTLE HANDLE BOLT
17	700-54	THROTTLE HANDLE WASHER
18	200-9	O-RING
19	560-13	THROTTLE VALVE ASSEMBLY
20	650-51	THROTTLE VALVE SPRING
21	700-S-26	THROTTLE VALVE CAP
22	700-30	O RING
23	400-37	PIPE PLUG
24	650-1-ALS	THROTTLE HANDLE
25	560-1	MOTOR HOUSING
26.2	AA-550-60	GOVERNOR ASSY. (6000 RPM)
27	600-48	GOVERNOR RETAINER
28	1000-5	LOCK RING
29	700-9-H	BALL BEARING (UPPER)
30	550-13	REAR GASKET
31	550-3	REAR END PLATE
32	550-6	ROTOR BLADES
33	550-5	ROTOR
34	700-37	ROLL PIN
35	550-2	CYLINDER
36	560-10	END PLATE
37	550-10	KEY
38	550-8	SPINDLE
39	550-1-BTG	GASKET
40	9002	BALL BEARING (LOWER)
41	560-20	WAVY WASHER
42	650-H-14	SEAL
43	550-1-B	BEARING SUPPORT
44.3	412988	CUP GUARD 6"
45	700-46	PINCH BOLT LOCKWASHER
46	700-47A	CAP SCREW
47	550-12B	WHEEL FLANGE
48	700-34	ARBOR NUT
49	650-60	COLLAR (INCL. #50)
50	N/A	SCREW
51	1100-200	2" WRENCH
52	1102-015	5/32" ALLEN WRENCH

Limited Warranty

Universal Tool warrants its tools to be free from defects in material and workmanship for one year from the date of purchase. This warranty does not apply to tools which have been abused, misused, modified or repaired by someone other than Universal Tool or its authorized service centers. If a Universal Tool proves defective in material of workmanship within one year after purchase, return it to any authorized service center or to Universal Tool, freight prepaid. Please enclose your name, address and adequate proof of purchase date with a brief description of the defect. Universal Tool will, at its option, repair or replace defective tools, free of charge. Repairs or replacements are warranted as described above for the remainder of the warranty period. Universal Tool's sole liability and your exclusive remedy under this warranty is limited to repair or replacement of the defective tool. There are no other warranties expressed or implied and Universal Tool shall not be liable for incidental, consequential or special damages, or any other damages, costs or expense of repair or replacement as described above.