DIMENSIONS:
INCHES
[MILLIMETERS]

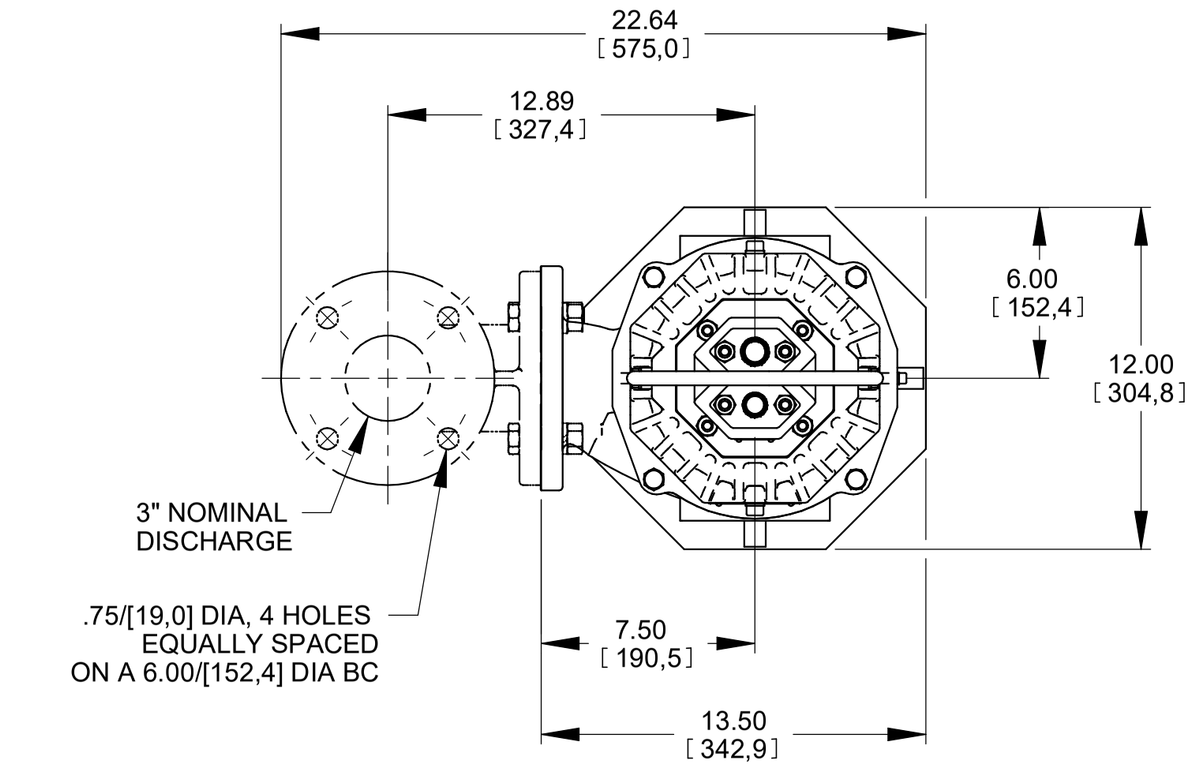

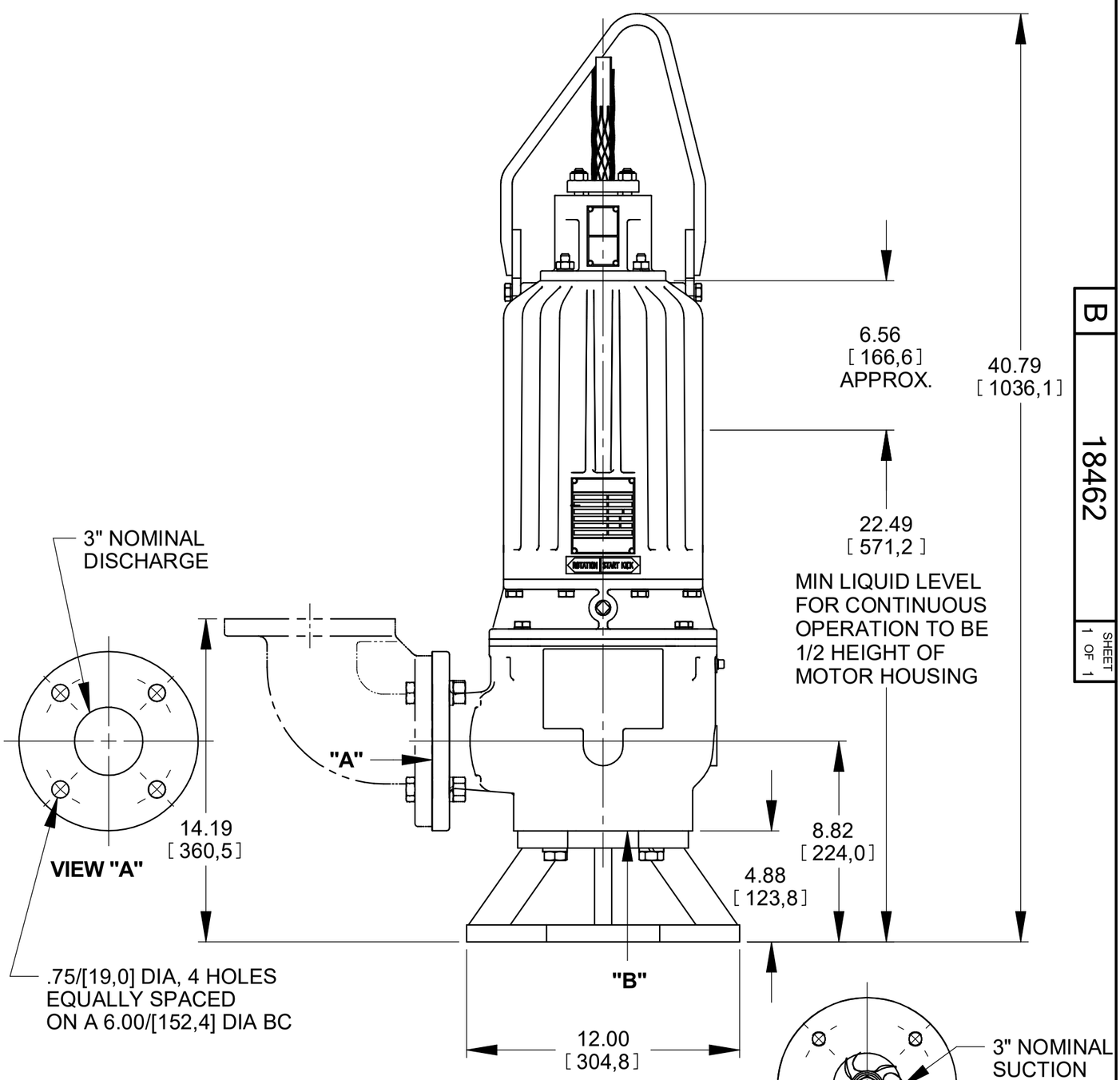

SFV3A
SFV3A-X
SFEV3A
SFEV3A-X

SFEV3C
SFEV3C-X

PUMP W/ TRASH STAND
SHOWN WITH OPTIONAL
DISCHARGE ELBOW

19-066

THE GORMAN-RUPP CO.
MANSFIELD, OHIO
ST. THOMAS, ONTARIO

DRAWN BY	SCALE	MODEL
REP	3/16	NOTED
DATE 08/09/10	REVISED 11-29-19	OUTLINE NUMBER 18462

B

18462

SHEET 1 OF 1