DIMENSIONS:
INCHES
[MILLIMETERS]

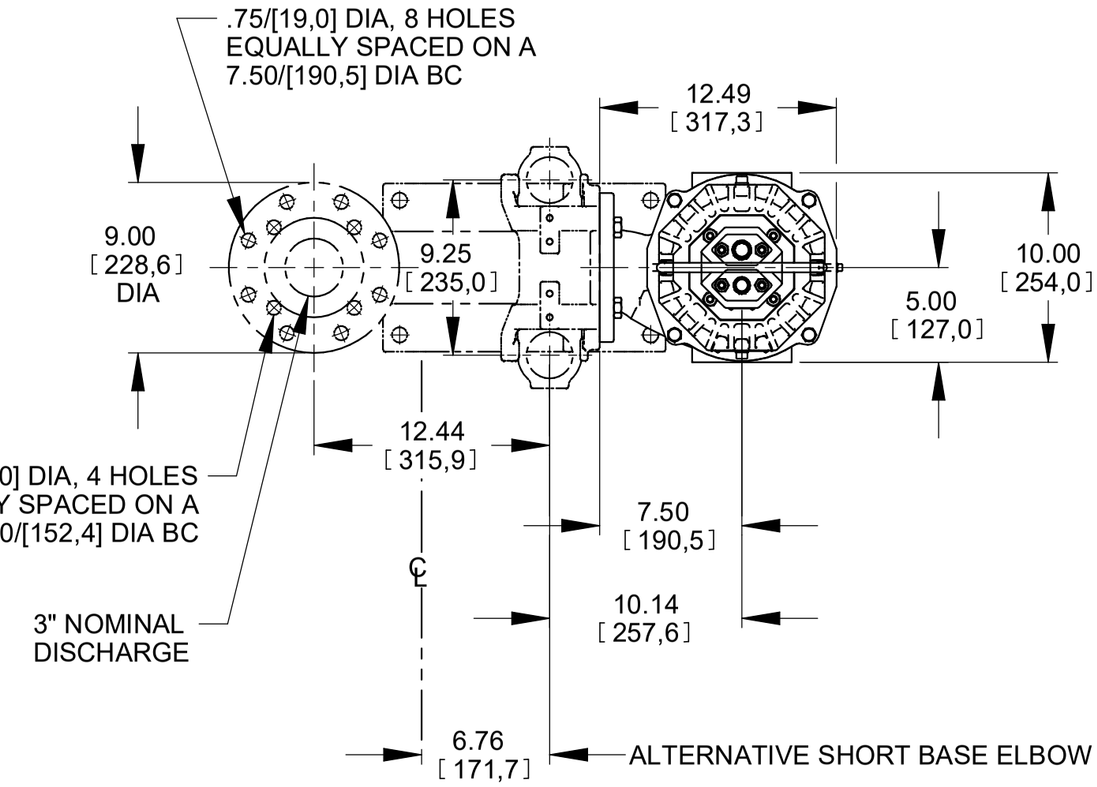

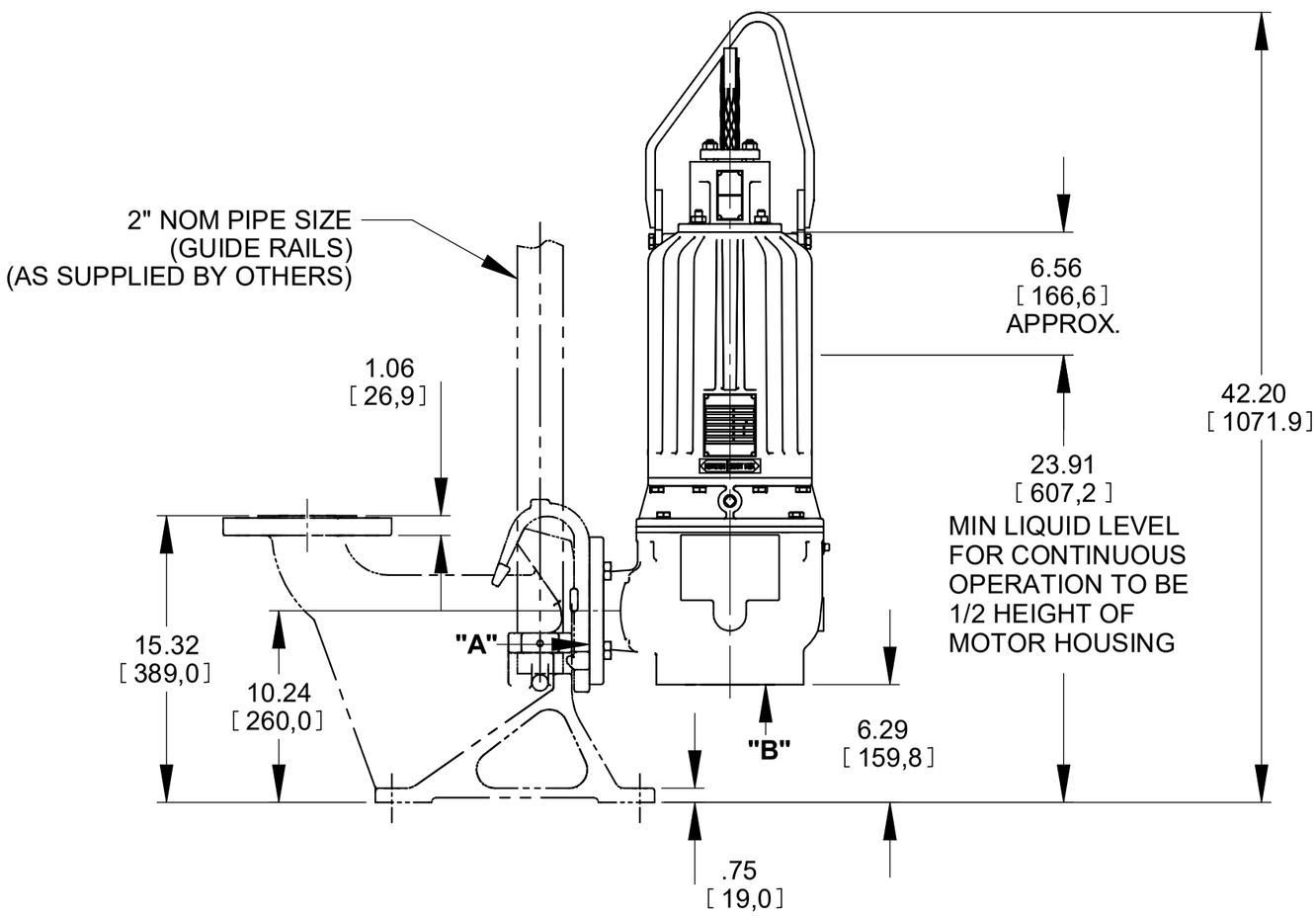

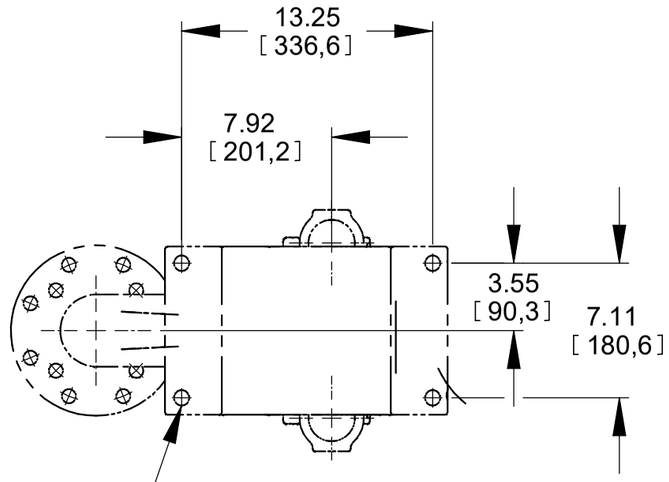

SHOWN WITH OPTIONAL
RAIL KIT AND BASE ELBOW

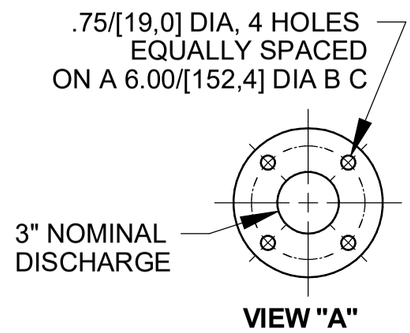

VIEW "A"

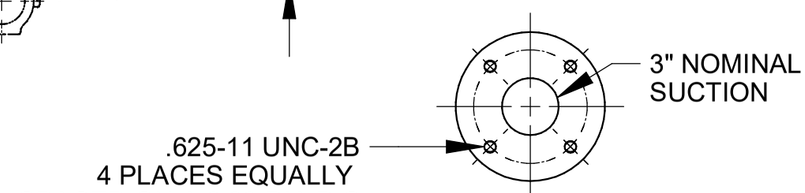

VIEW "B"

SFEV3C
SFEV3C-X

SFV3A
SFV3A-X
SFEV3A
SFEV3A-X

THE GORMAN-RUPP CO. MANSFIELD, OHIO ST. THOMAS, ONTARIO	DRAWN BY REP	SCALE 1/8	MODEL NOTED
	DATE 08/09/10	REVISED 11-29-19	OUTLINE NUMBER 18461

19-066

B 18461

SHEET 1 OF 1